BR 80

Holger Matthes

www.holgermatthes.de

Mehr Anleitungen und Konstruktionstipps:

Besuche die Verlagswebseite des Buchs:
www.dpunkt.de/s/train

1. Auflage 2016,
294 Seiten, komplett in Farbe, Broschur
€ 26,90 (D)

ISBN
Buch 978-3-86490-355-7
PDF 978-3-86491-936-7
epub 978-3-86491-937-4
mobi 978-3-86491-938-1

Holger Matthes

LEGO®-Eisenbahn

Konzepte und Techniken für realistische Modelle

Die LEGO-Eisenbahn lässt seit 50 Jahren nicht nur Kinderherzen höher schlagen – auch Erwachsene entdecken ihre alte LEGO-Eisenbahn im Keller oder auf dem Dachboden wieder. Dieses Buch zeigt, wie selbst ältere Eisenbahnen mit dem aktuellen System betrieben werden können, und wie anspruchsvolle und schöne Zugmodelle entstehen.

Holger Matthes beschreibt die grundlegenden Konzepte des innovativen Bauens mit LEGO, zeigt aber auch die Grenzen, die LEGO in der Welt der Eisenbahn mit sich bringt. Du erfährst, wie du mit dem beliebten Spielzeug auf kreative Weise Lokomotiven und Waggons realitätsnah gestaltest. Zusätzlich betrachtet der Autor auch die Themen Antrieb und Gleisanlage, um dich in die Lage zu versetzen, selbst wirklichkeitsgetreue Modelle zu entwerfen.

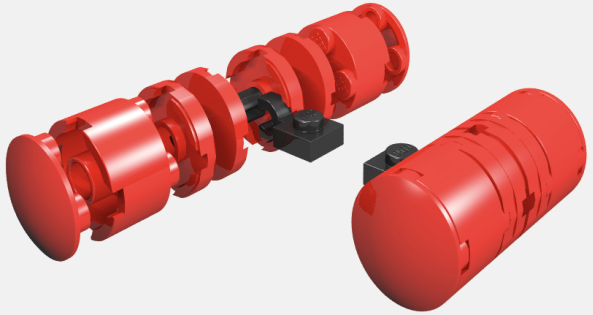

dpunkt.verlag
www.dpunkt.de

1

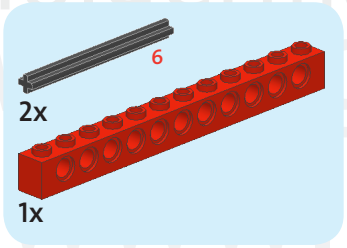

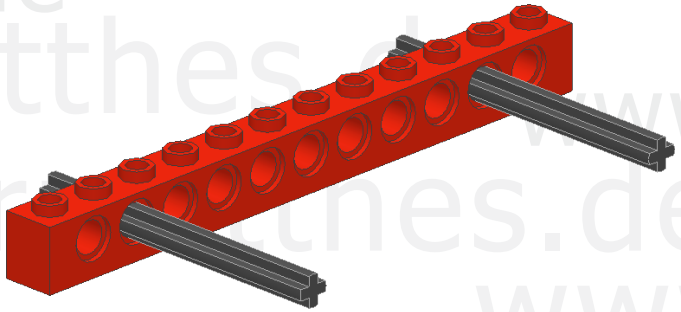

2

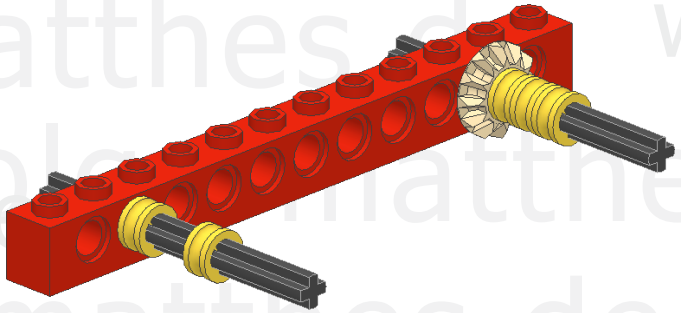

3

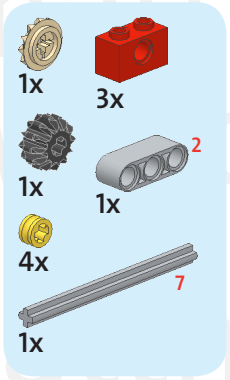

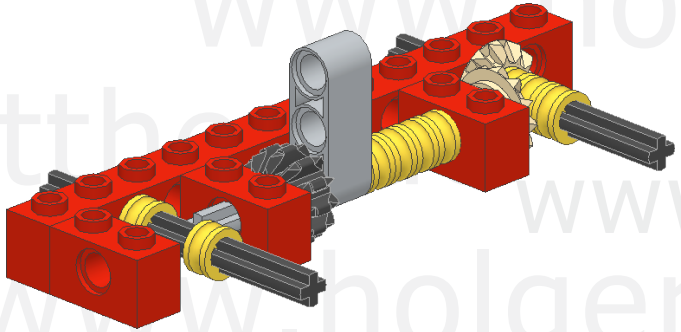

4

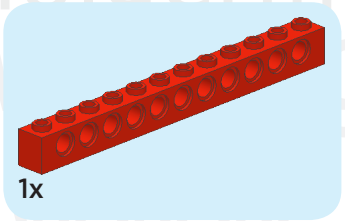

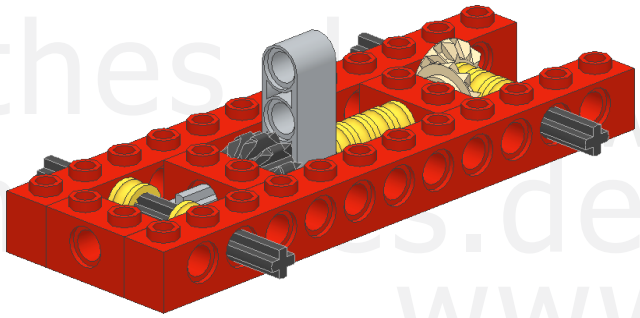

5

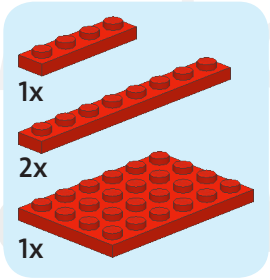

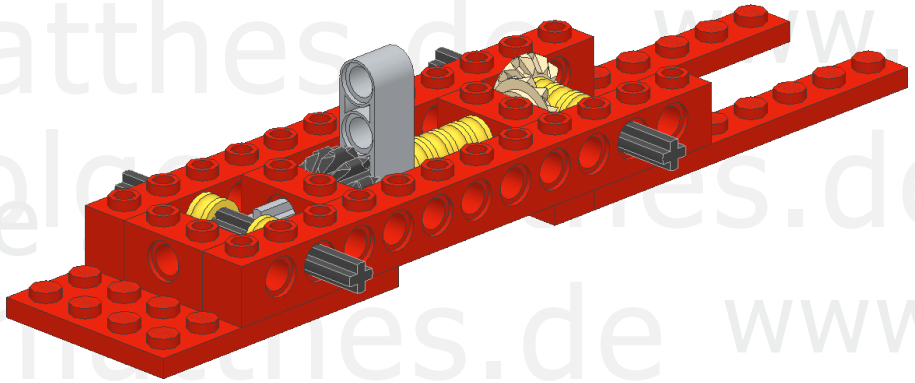

6

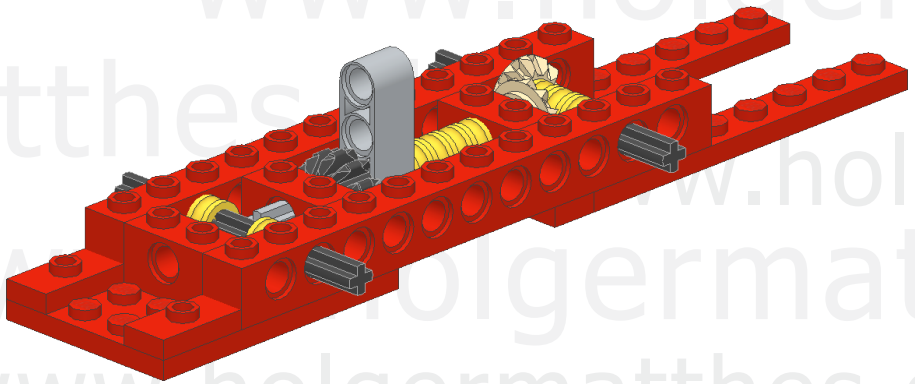

www.holgermatthes.de

7

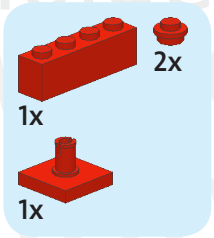

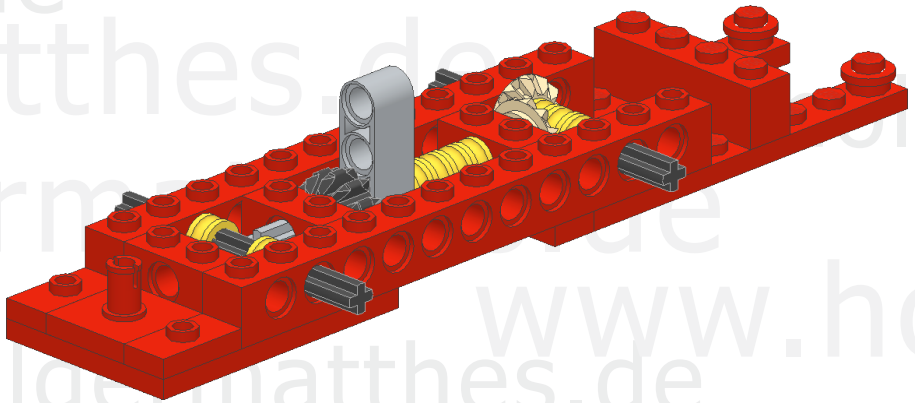

8

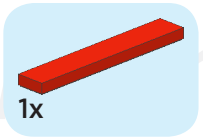

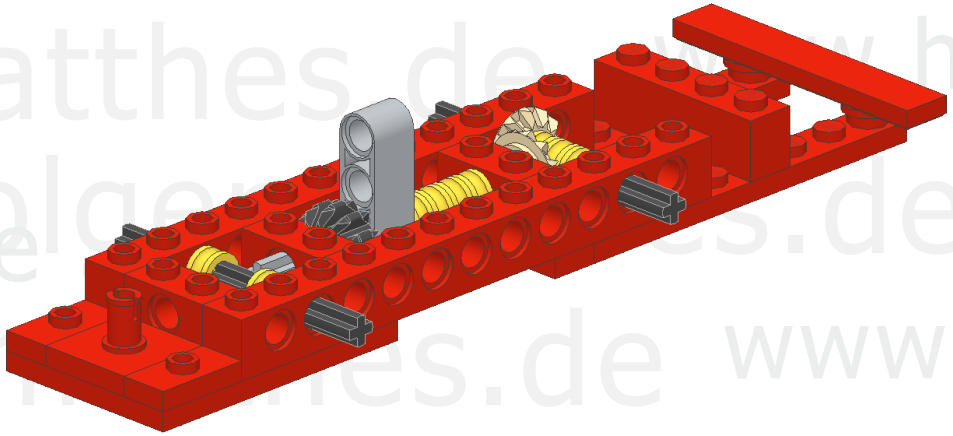

9

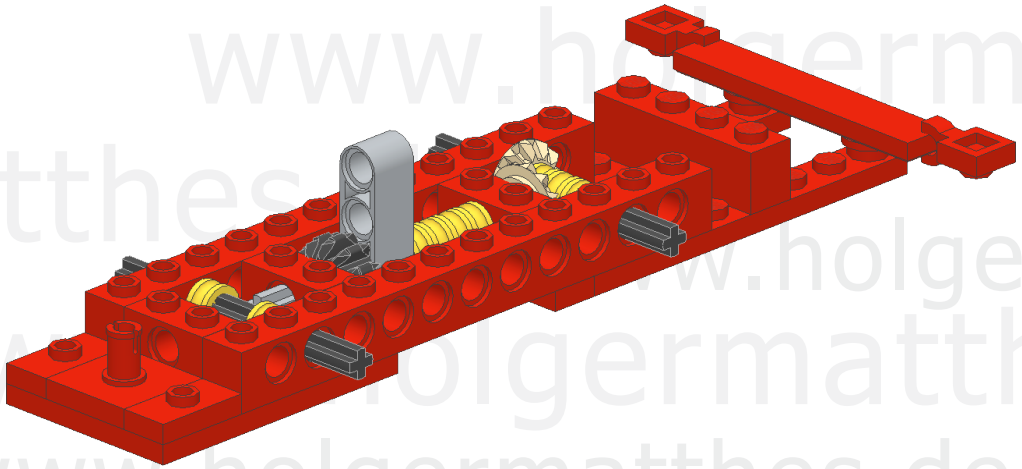

10

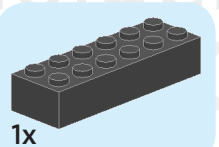

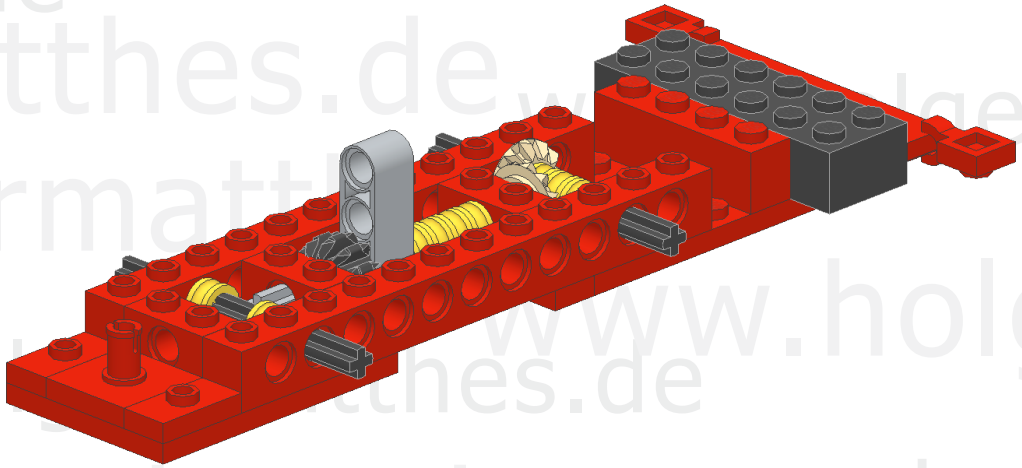

11

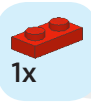

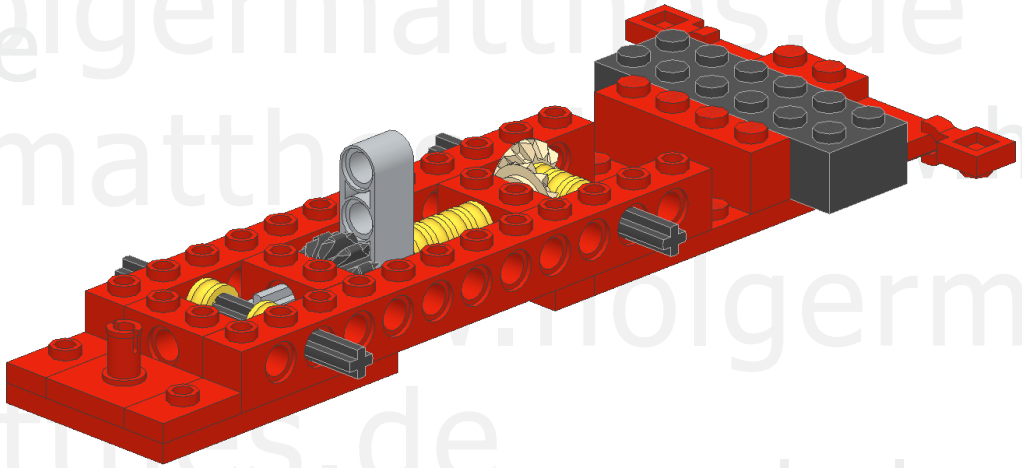

www.holgermatthes.de

12

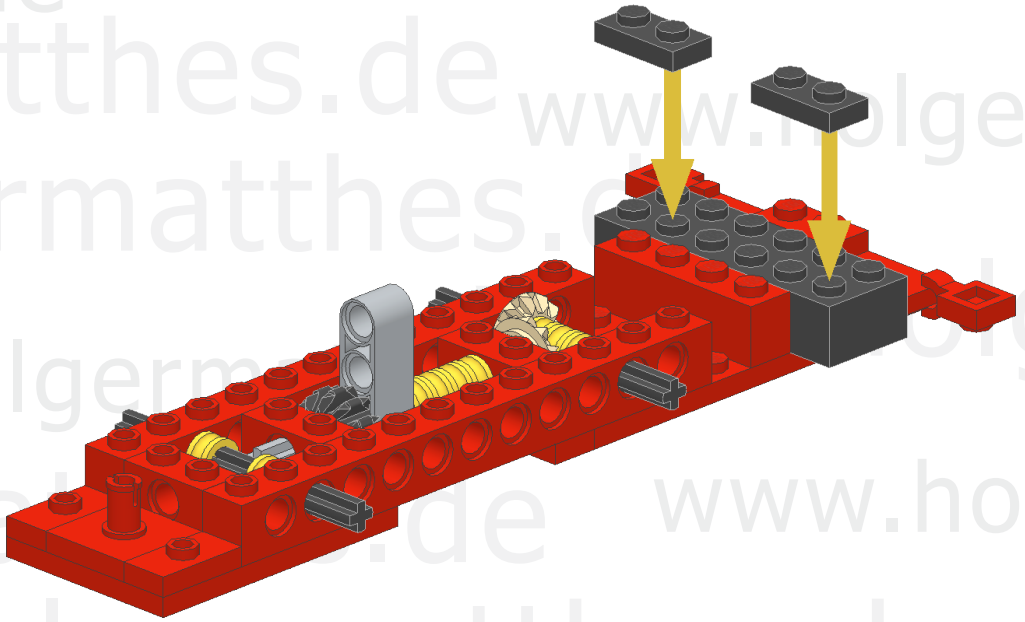

13

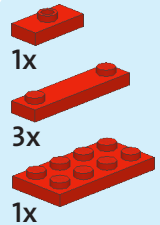

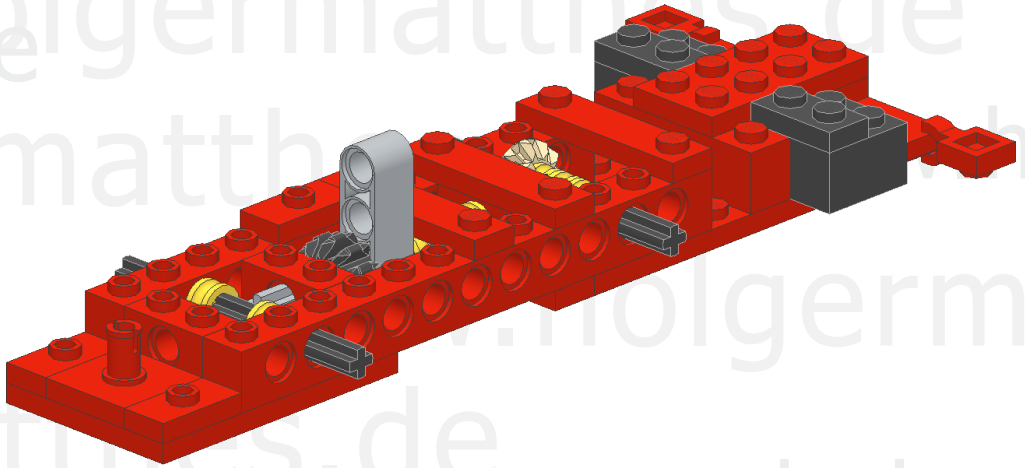

www.holgermatthes.de

14

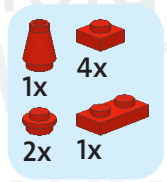

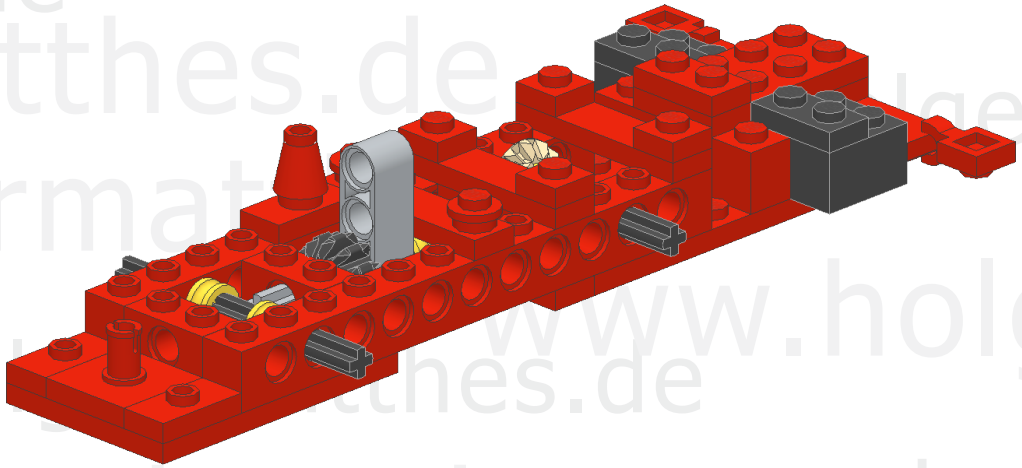

15

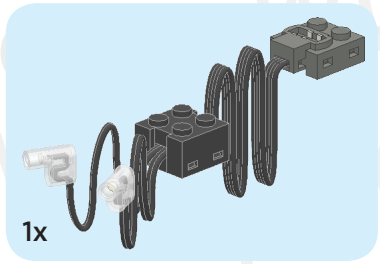

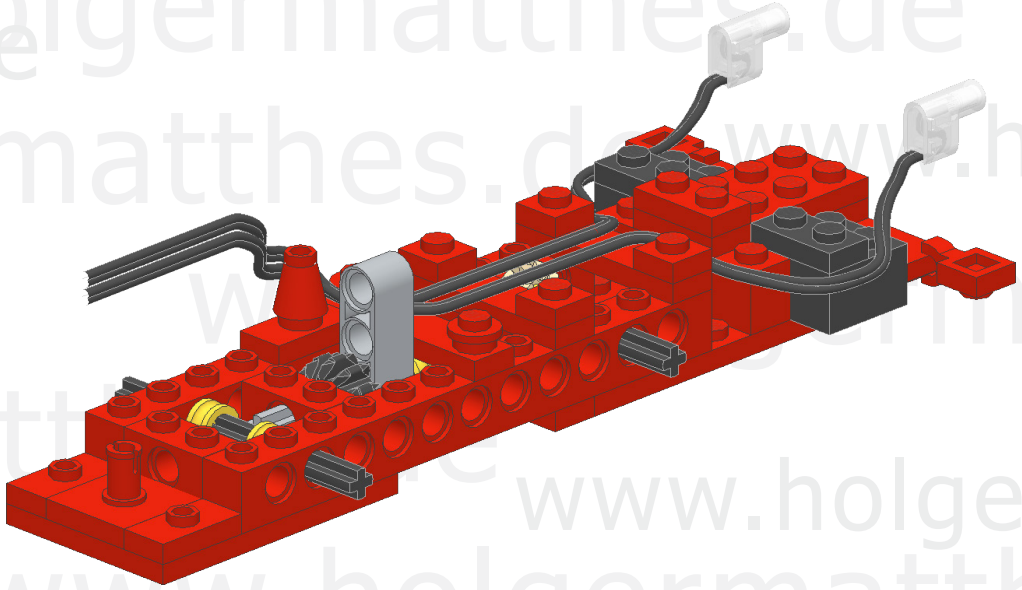

www.holgermatthes.de

16

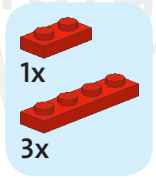

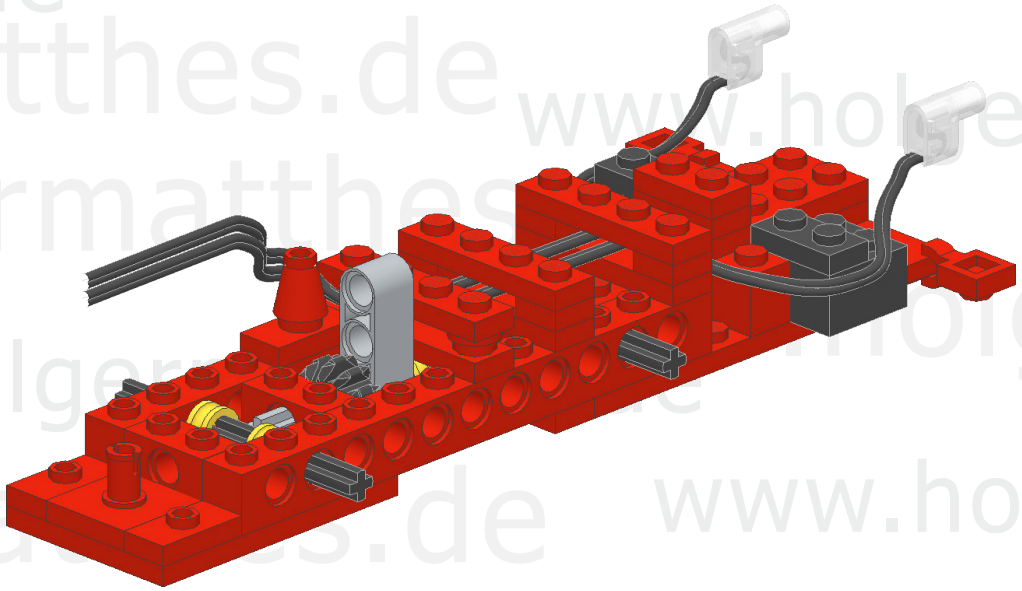

17

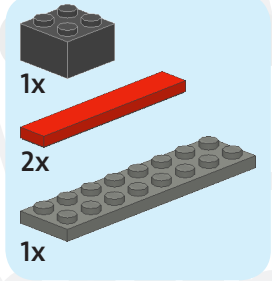

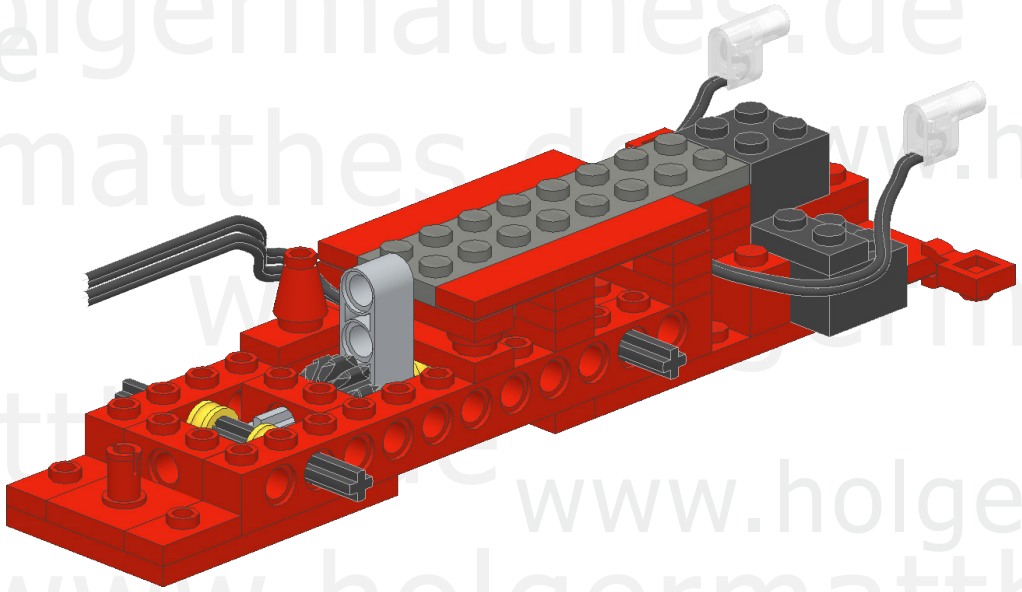

www.holgermatthes.de

www.holgermatthes.de

18

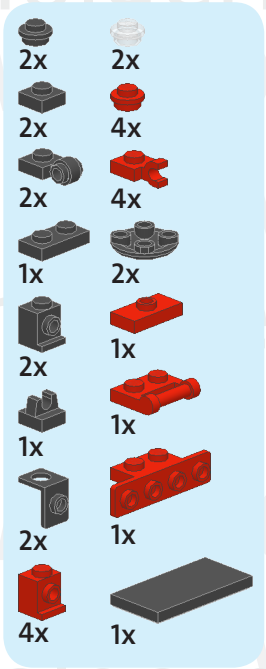

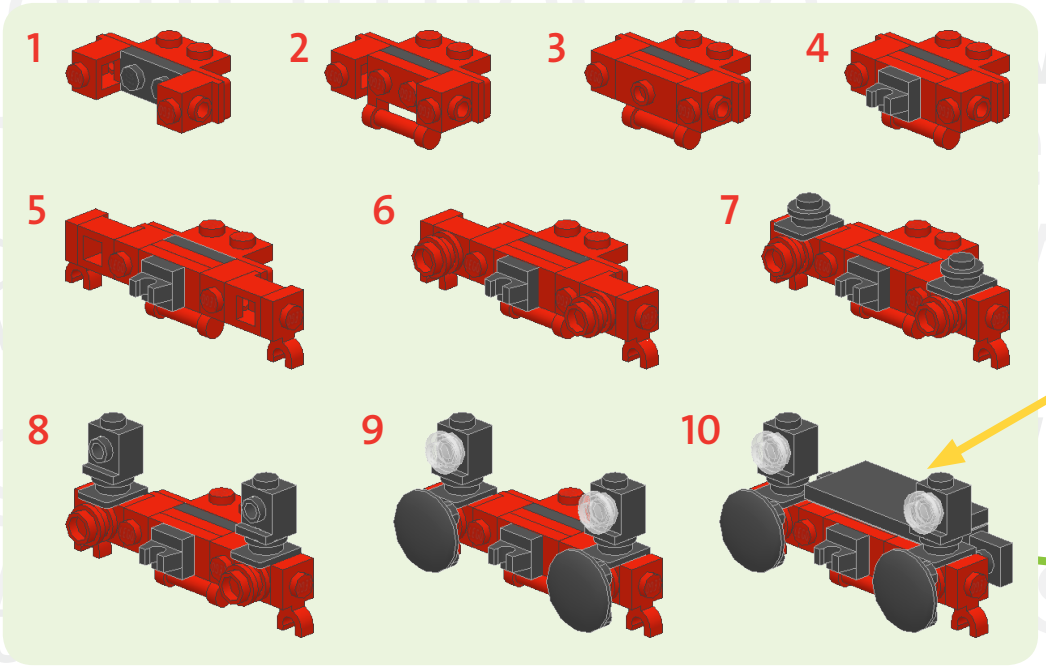

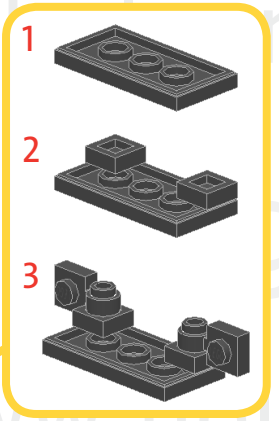

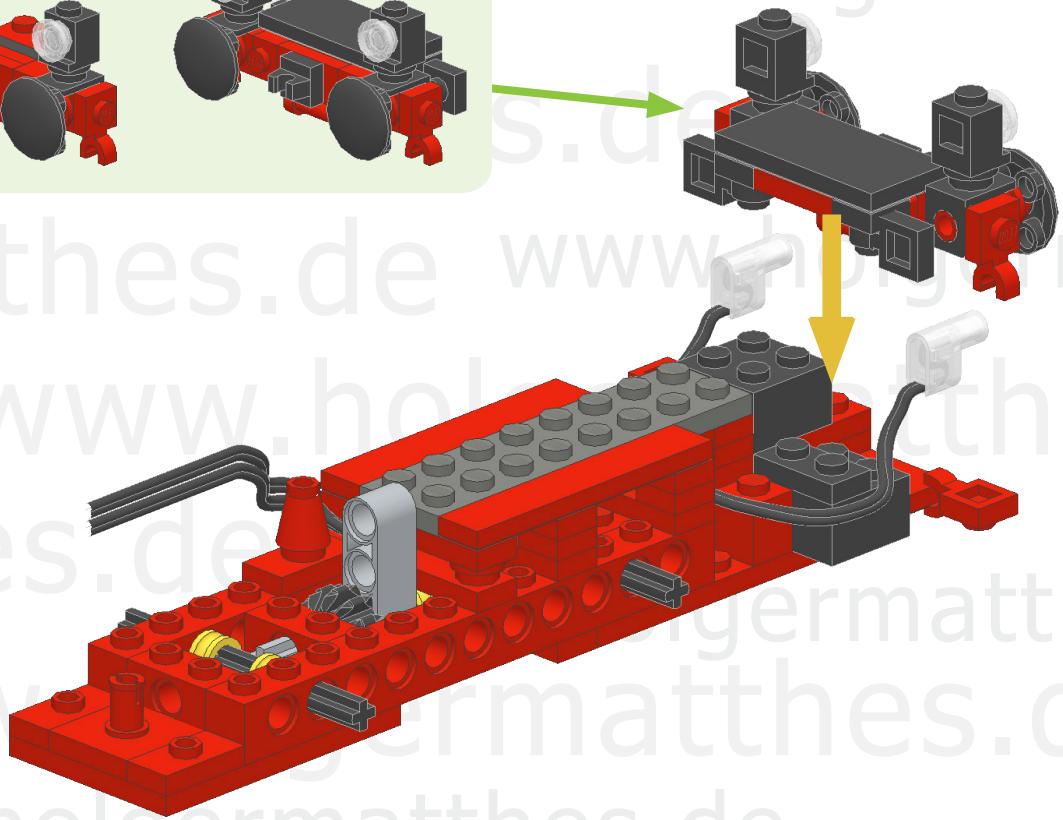

19

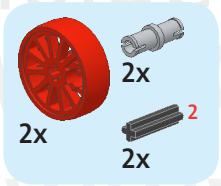

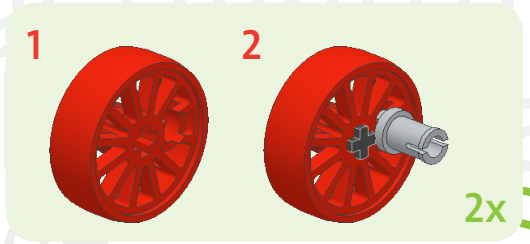

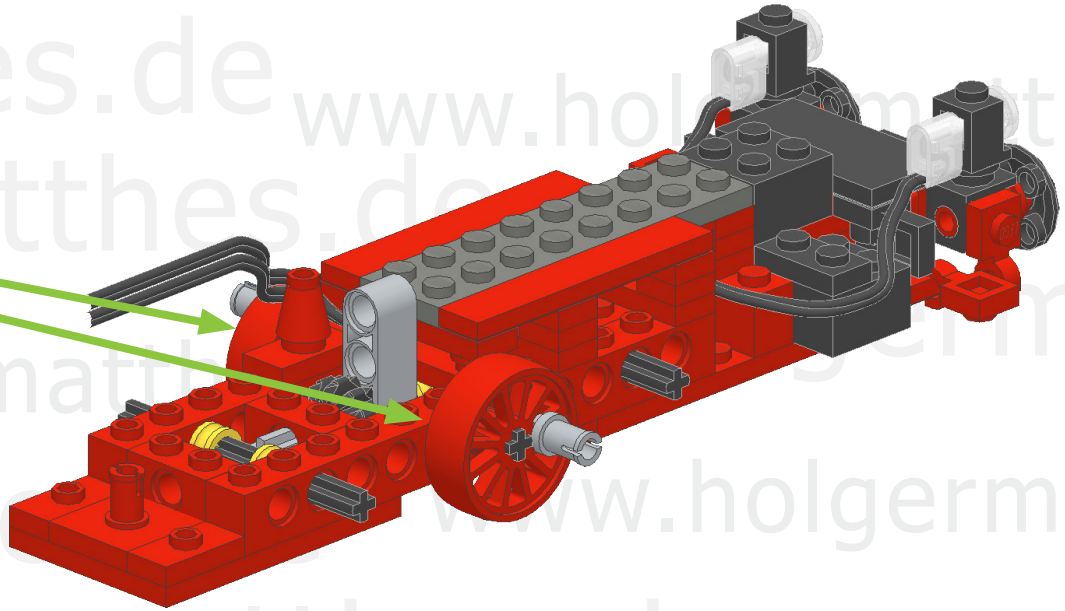

20

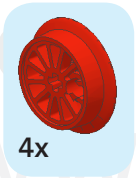

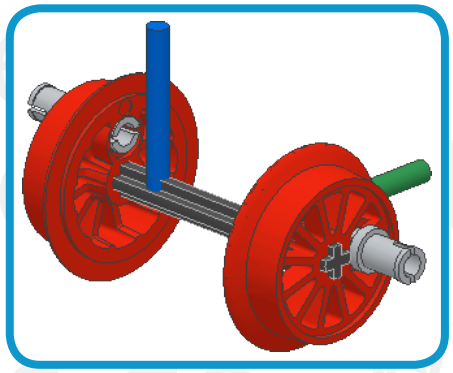

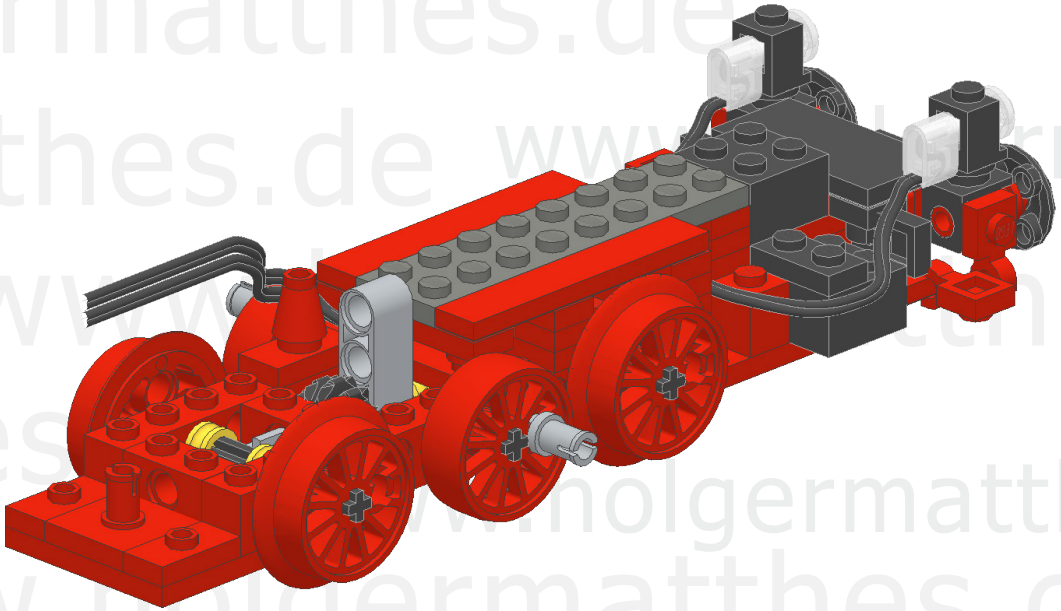

21

2x

2x

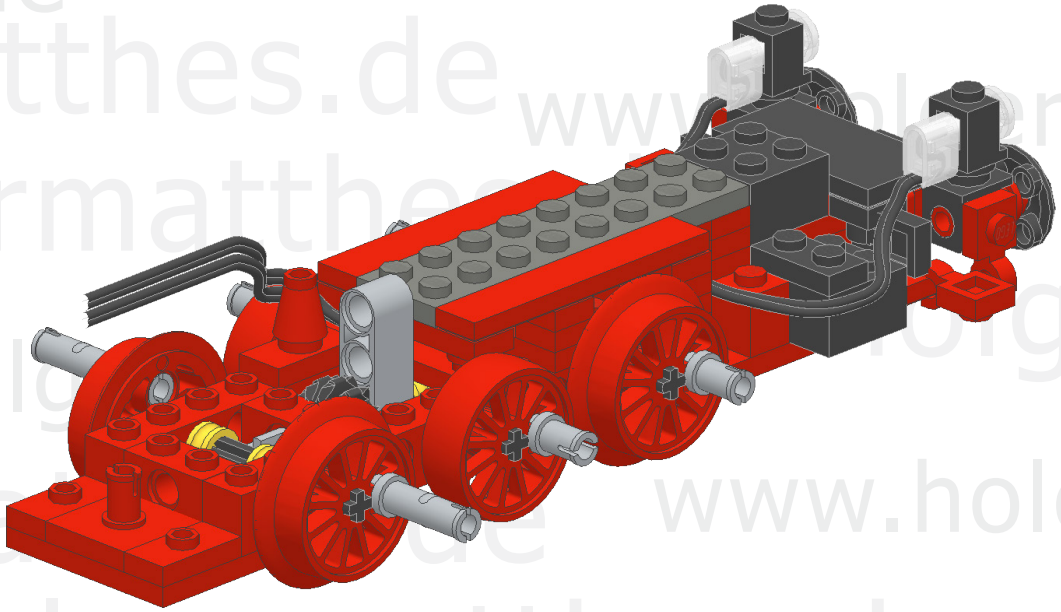

22

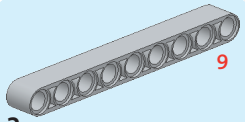

2x

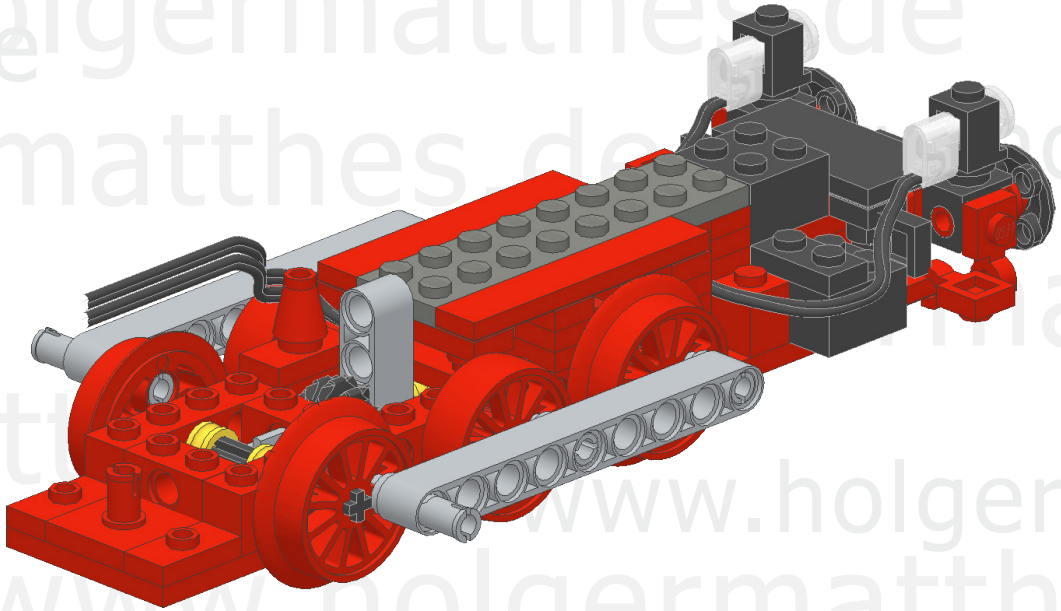

www.holgermatthes.de

23

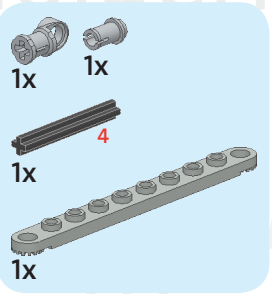

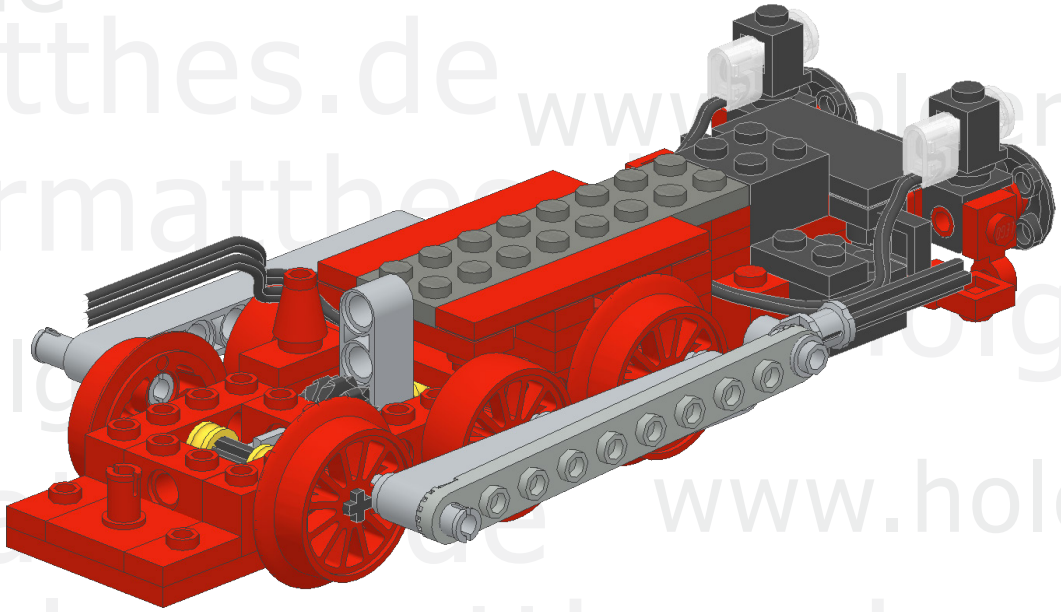

24

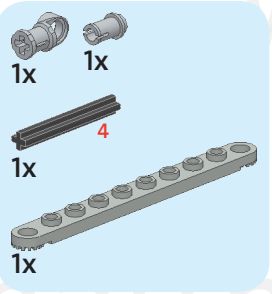

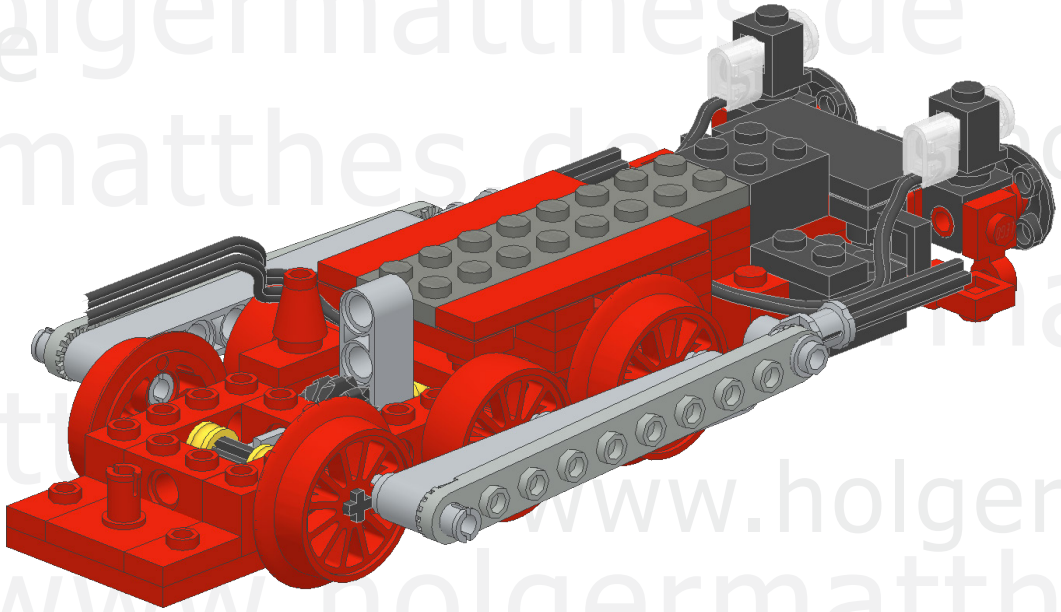

www.holgermatthes.de

www.holgermatthes.de

25

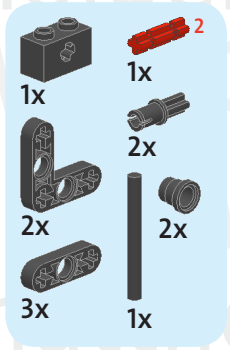

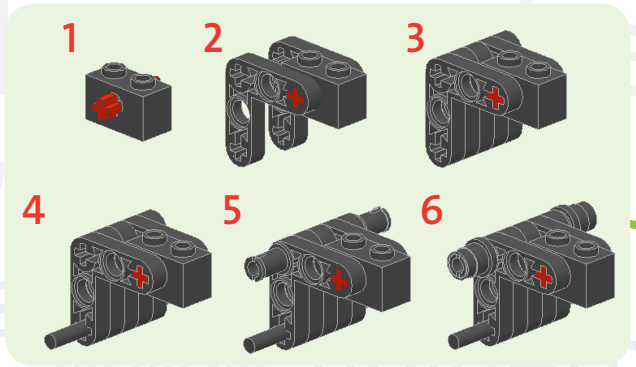

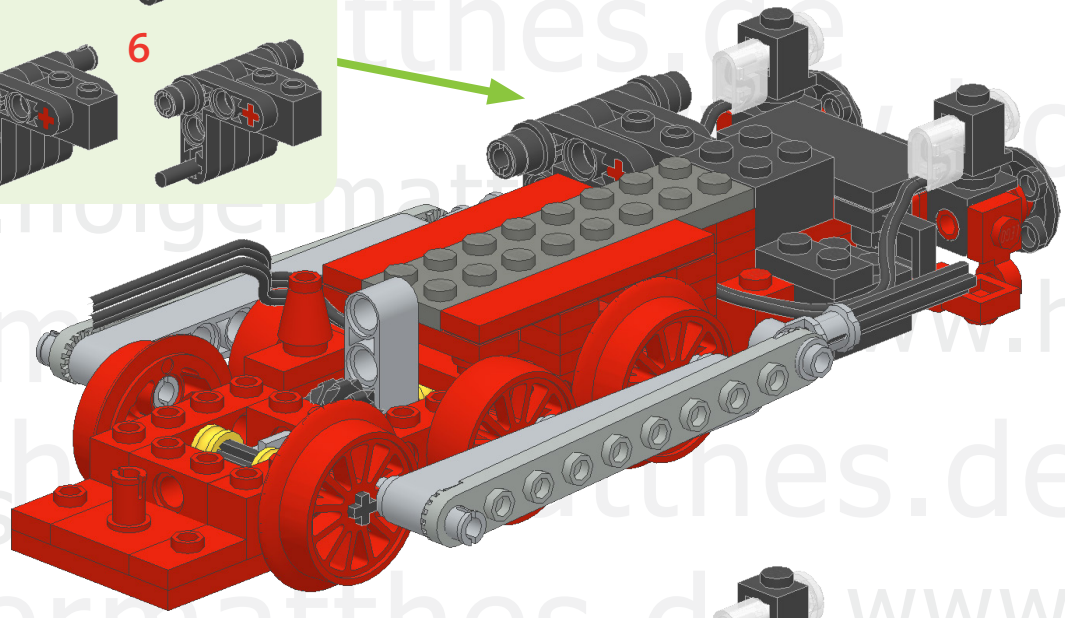

26

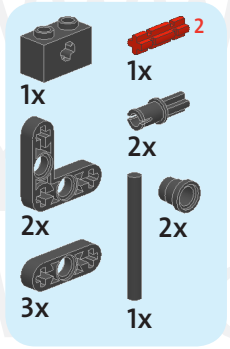

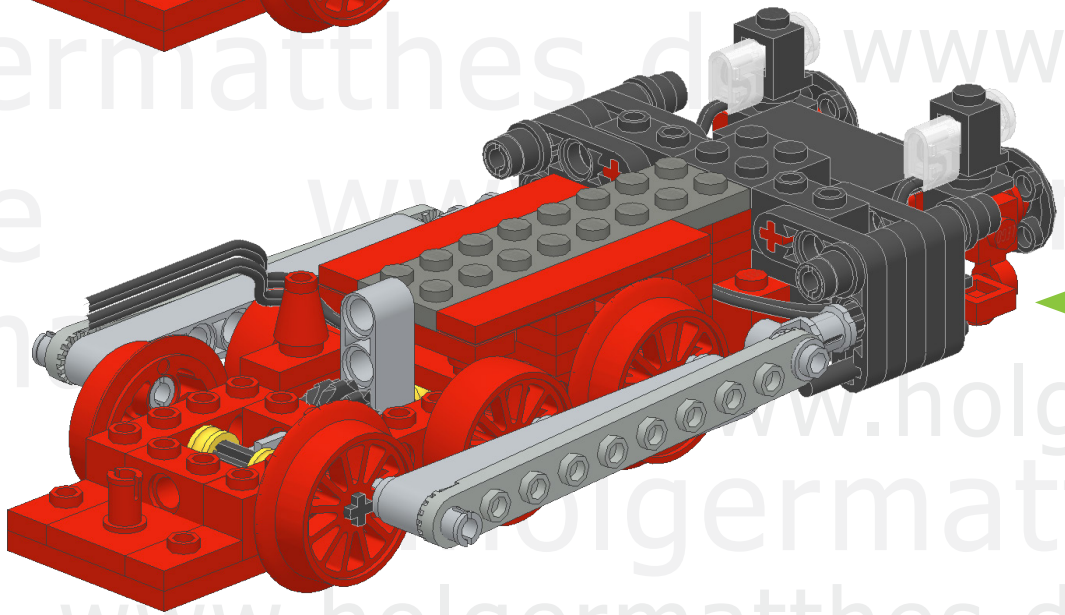

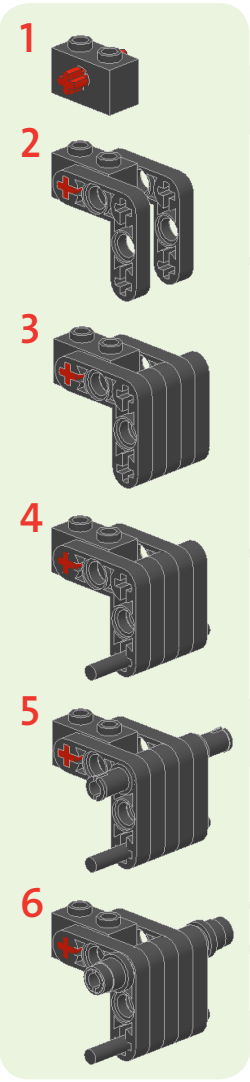

27

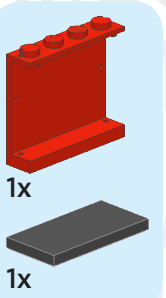

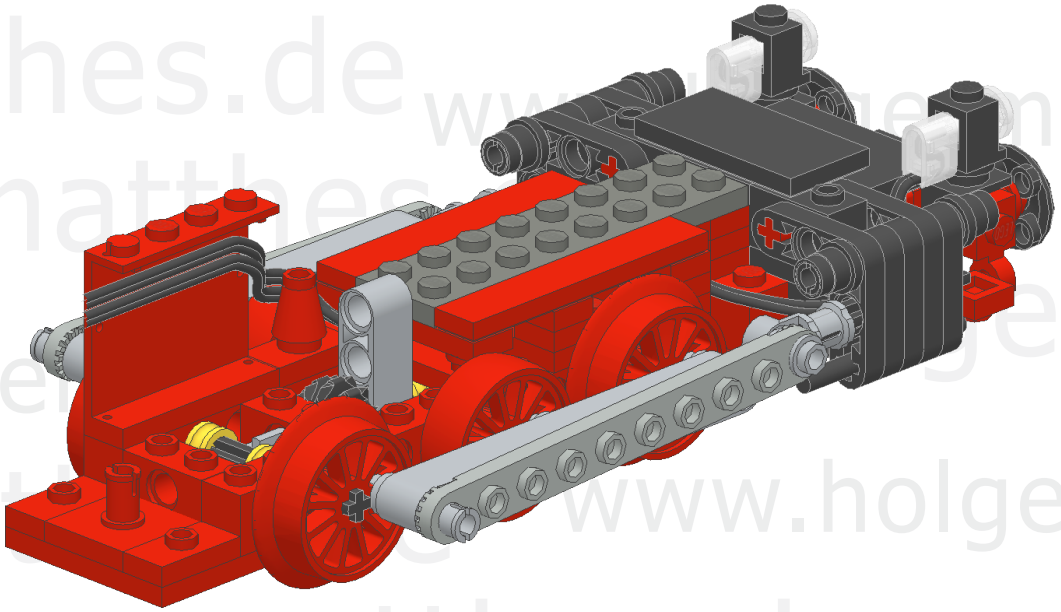

28

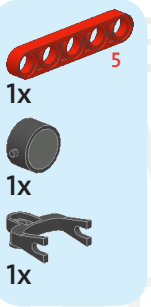

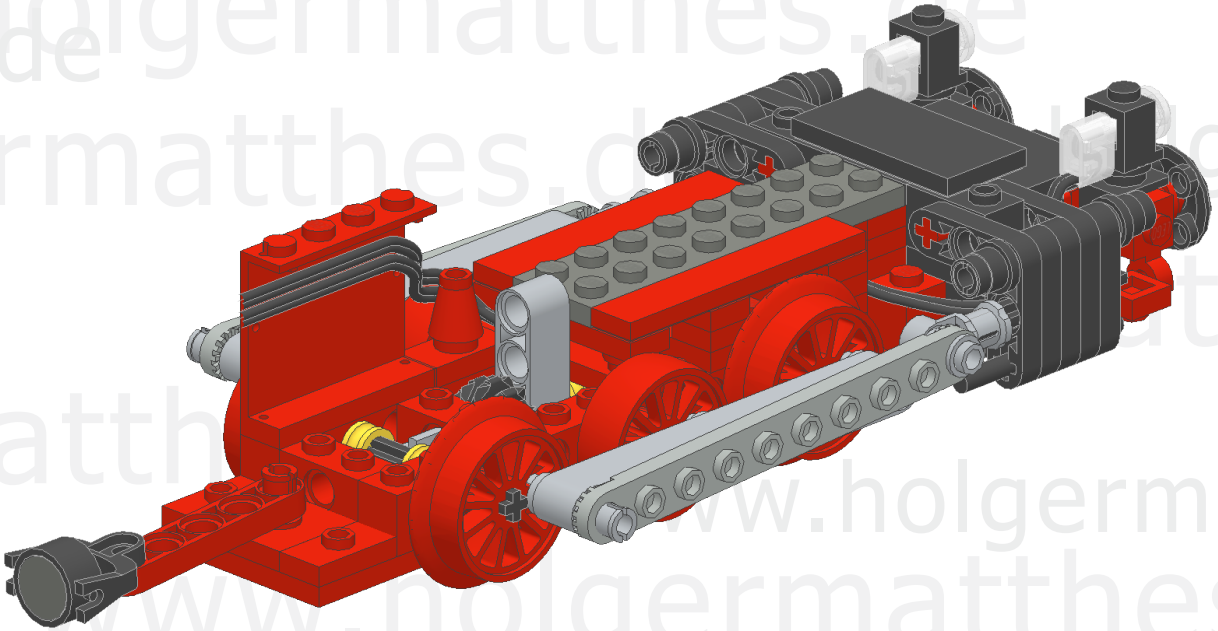

29

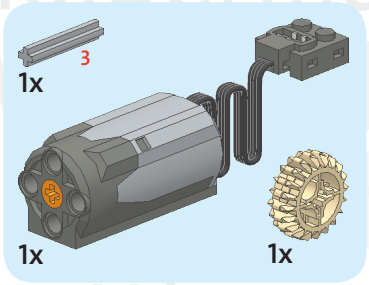

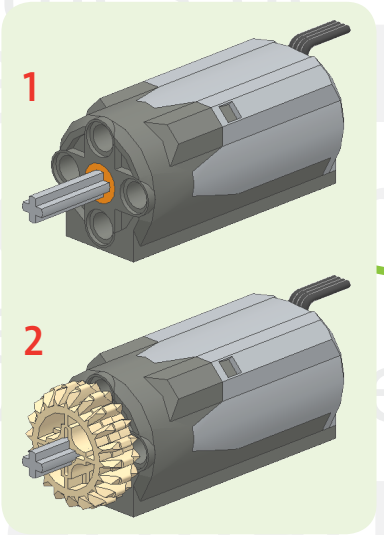

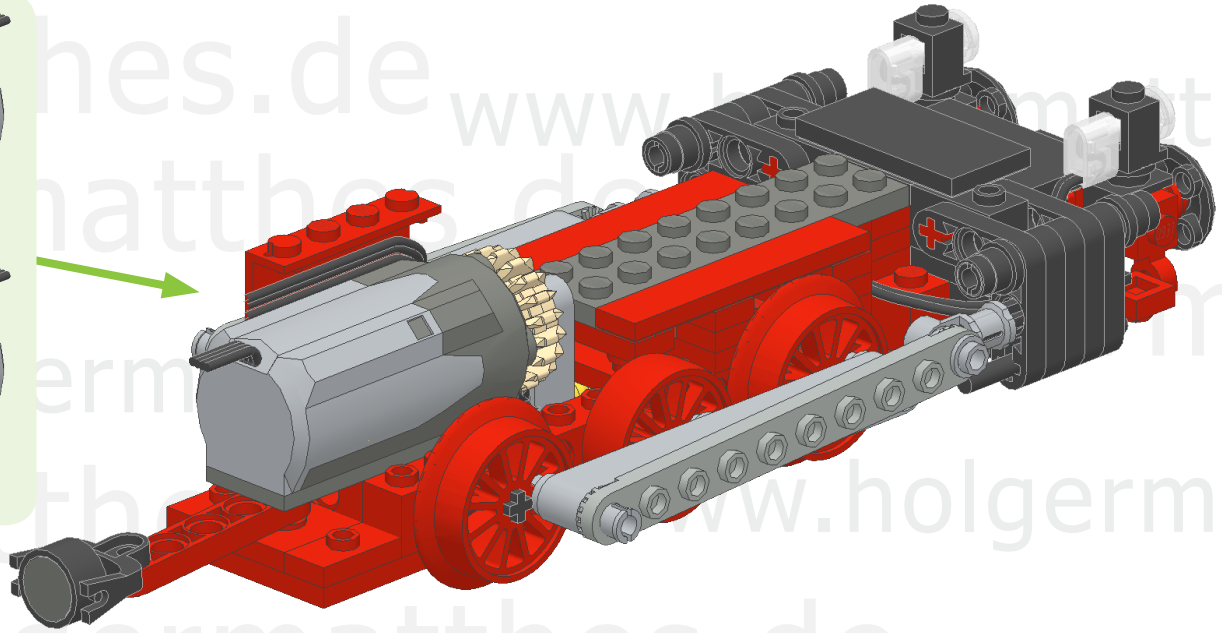

30

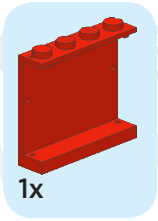

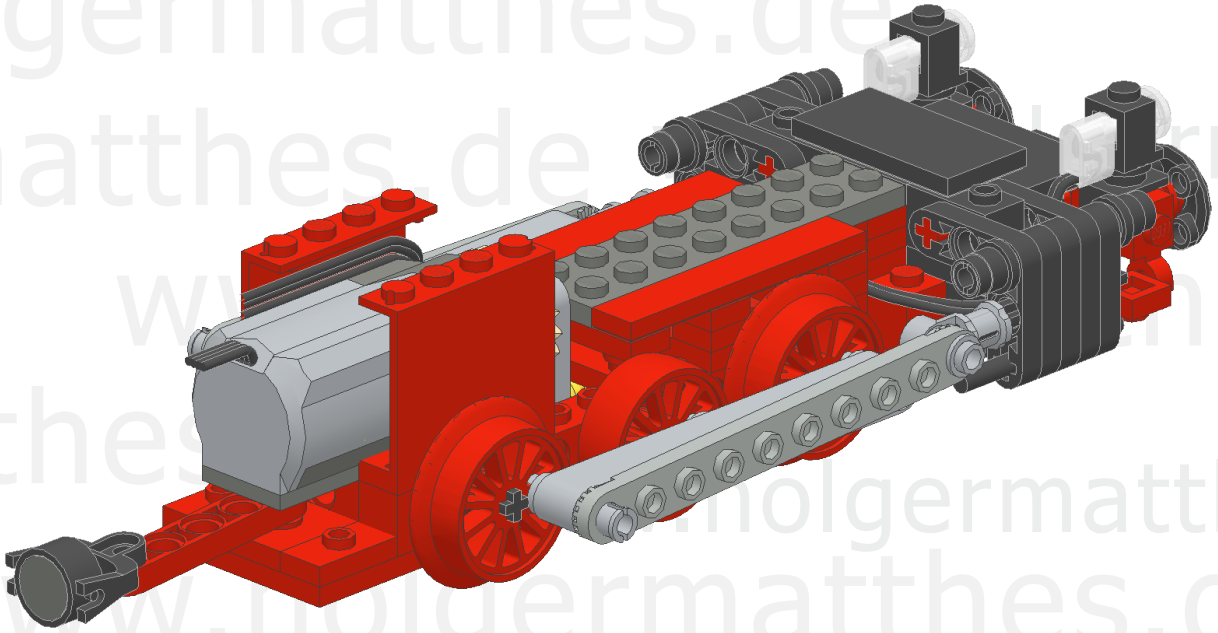

www.holgermatthes.de

www.holgermatthes.de

31

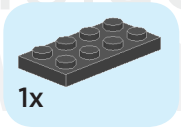

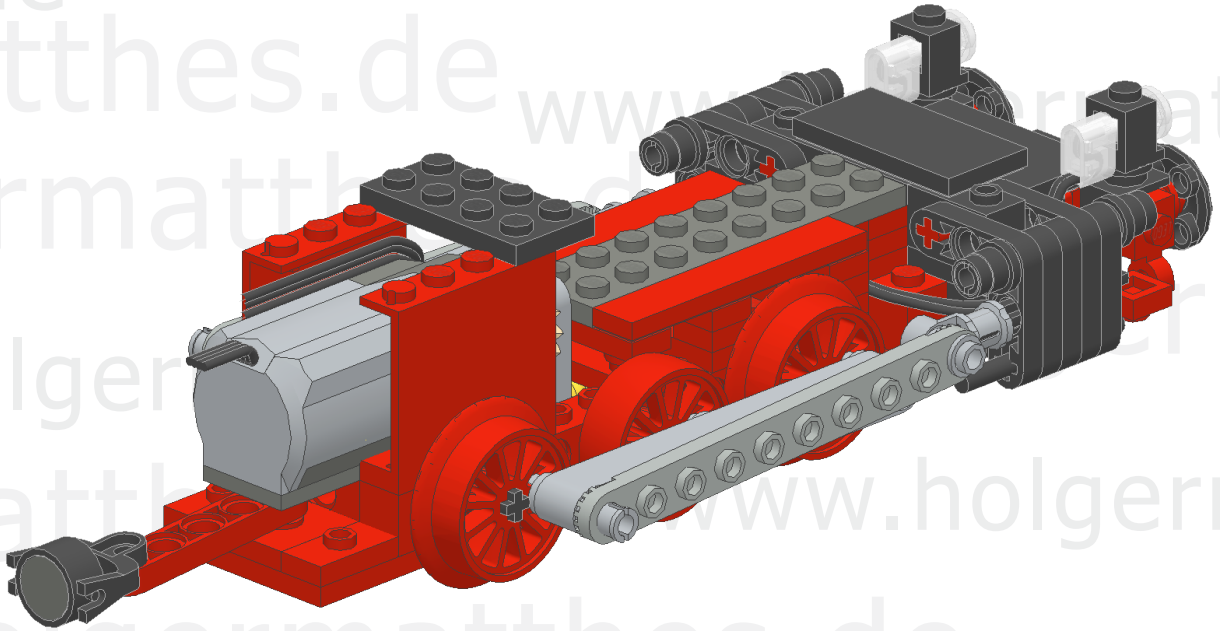

32

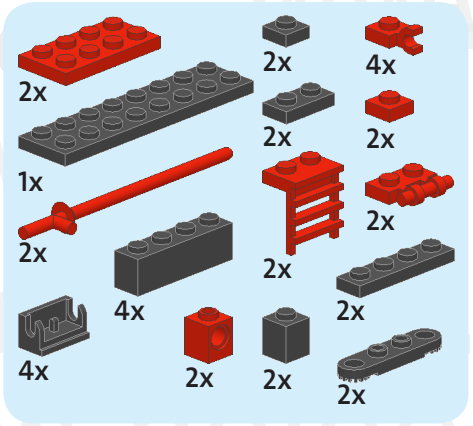

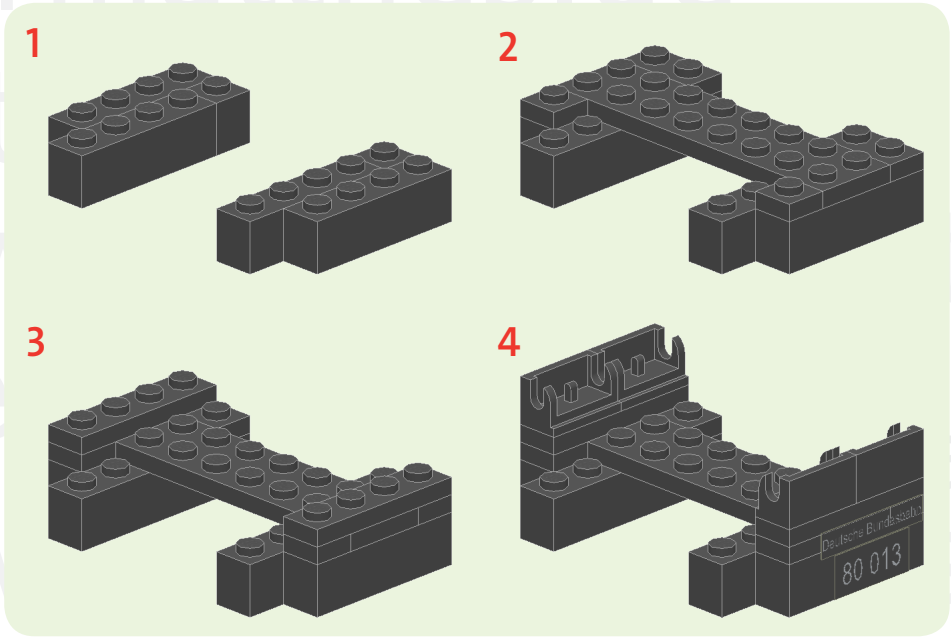

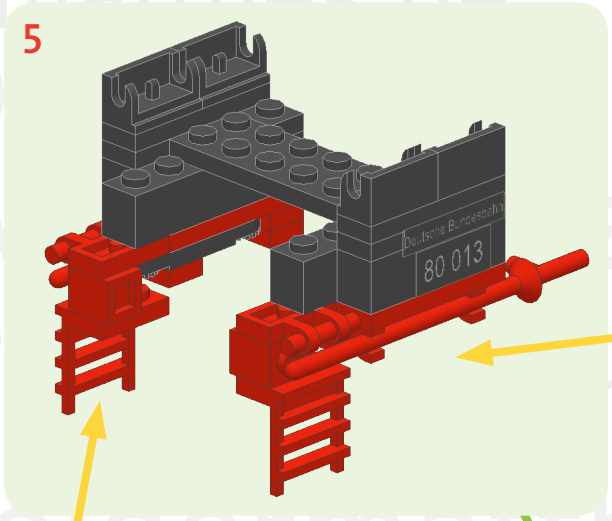
5
Deutsche Bundesbahn
80 013

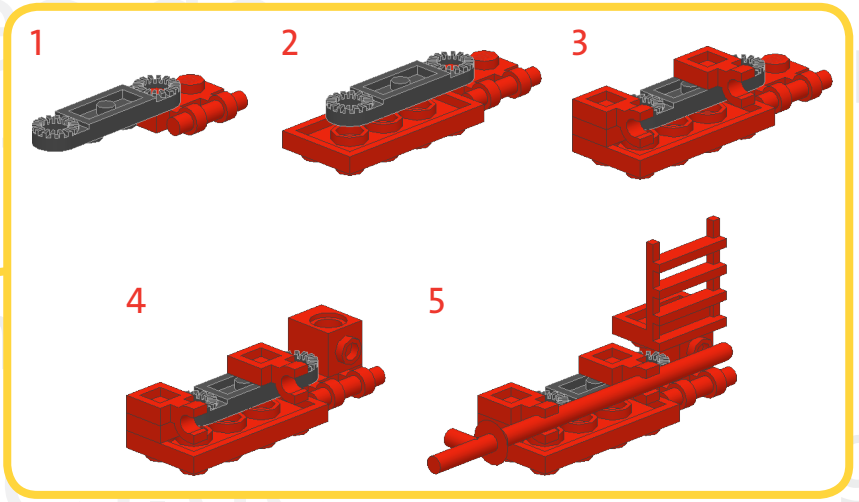
1
2
3
4
5

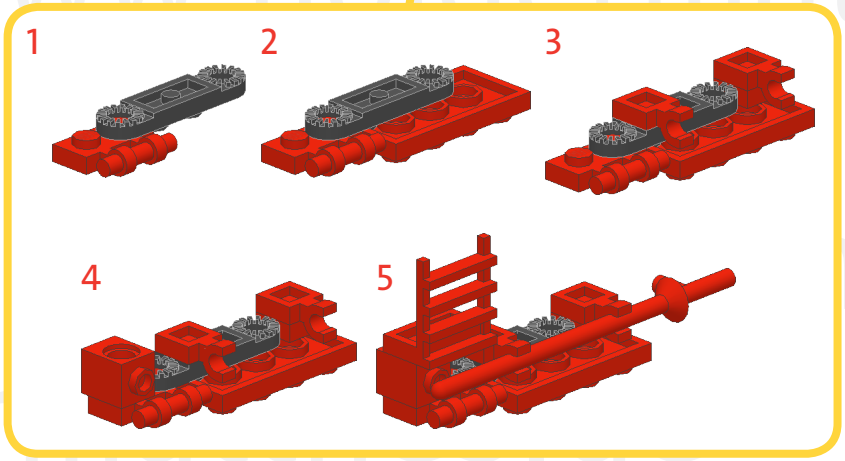
1
2
3
4
5

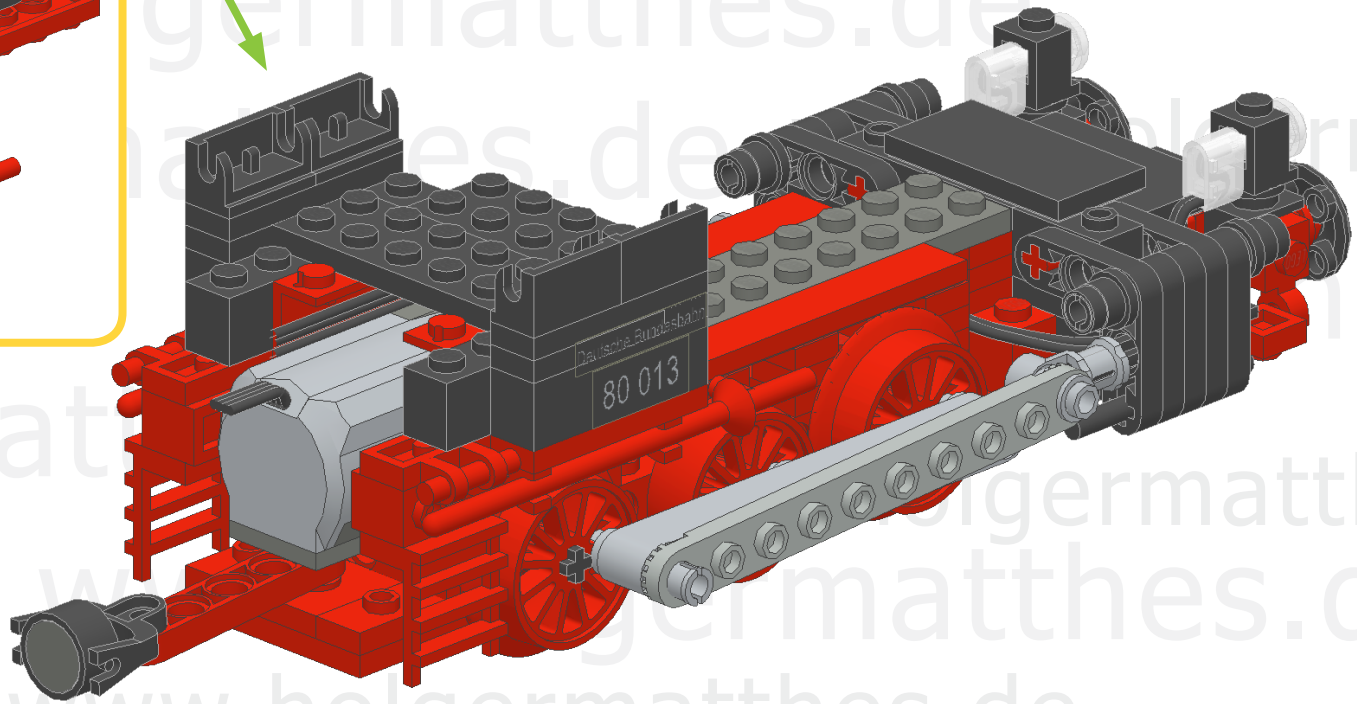
Deutsche Bundesbahn
80 013

www.holgermatthes.de

33

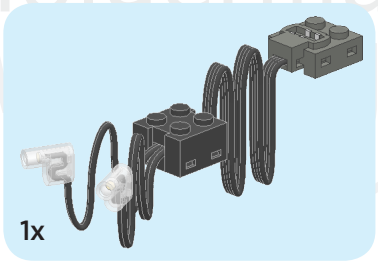

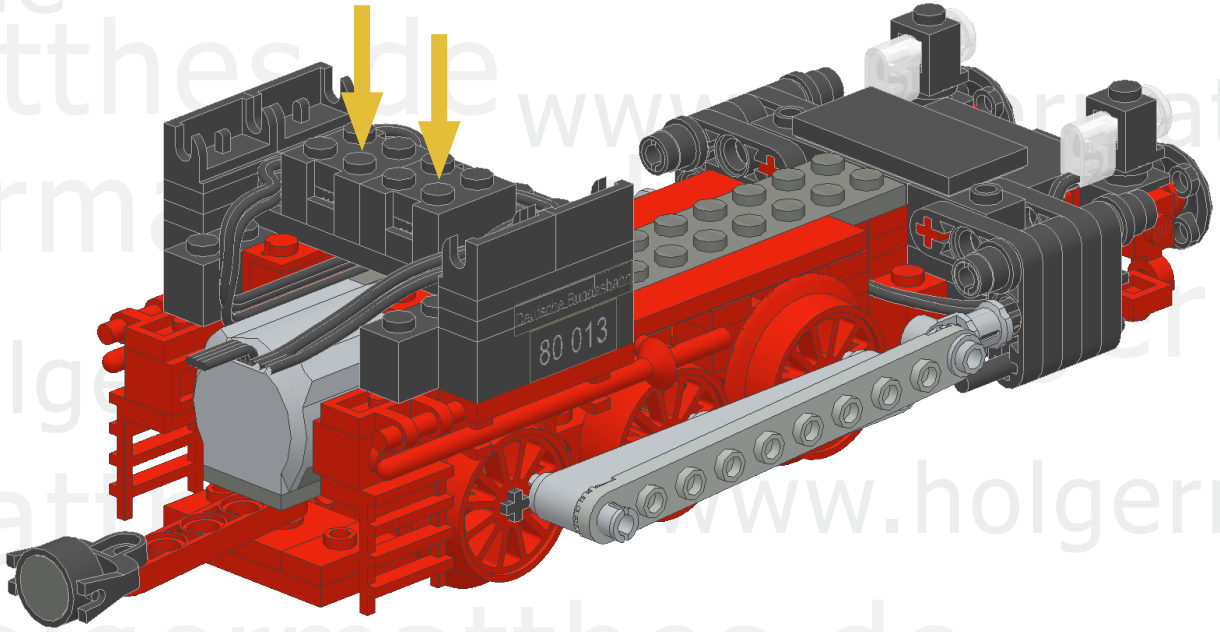

34

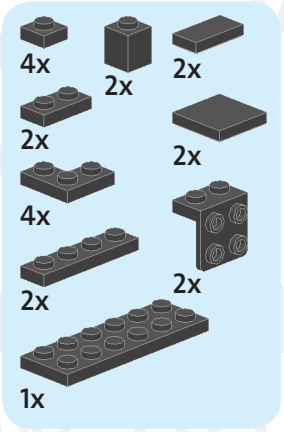

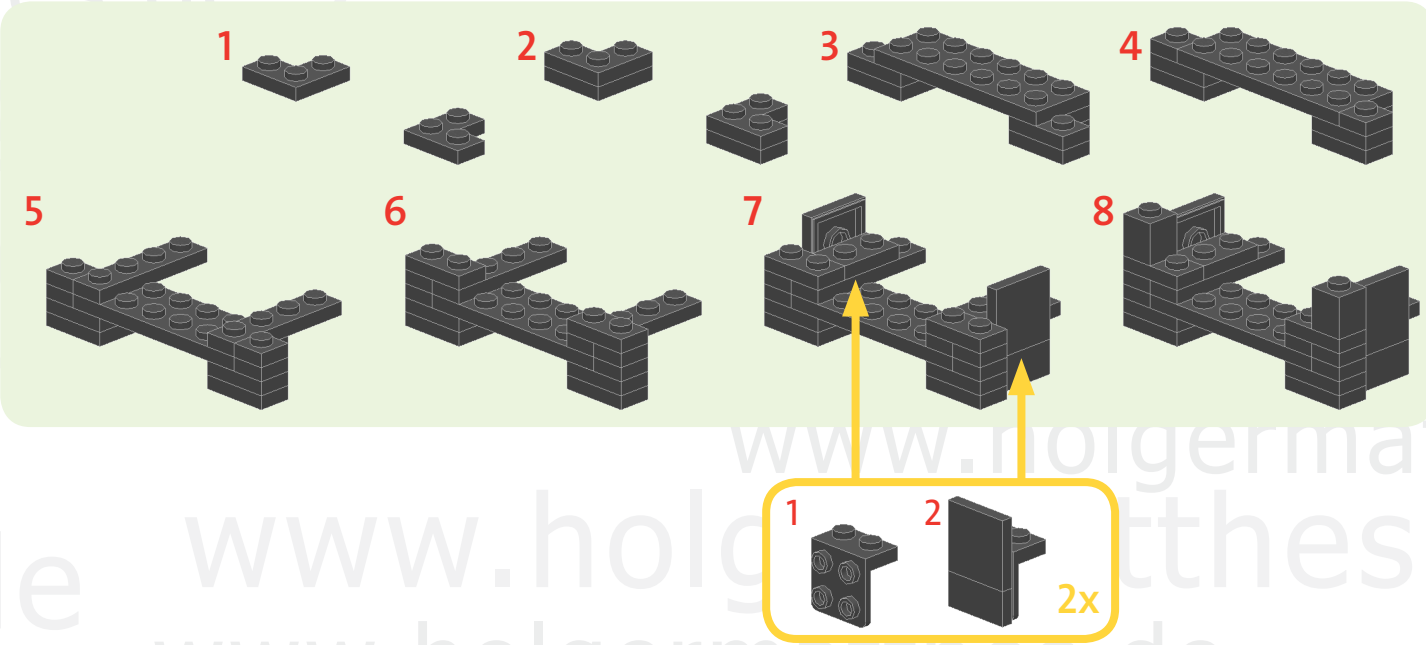

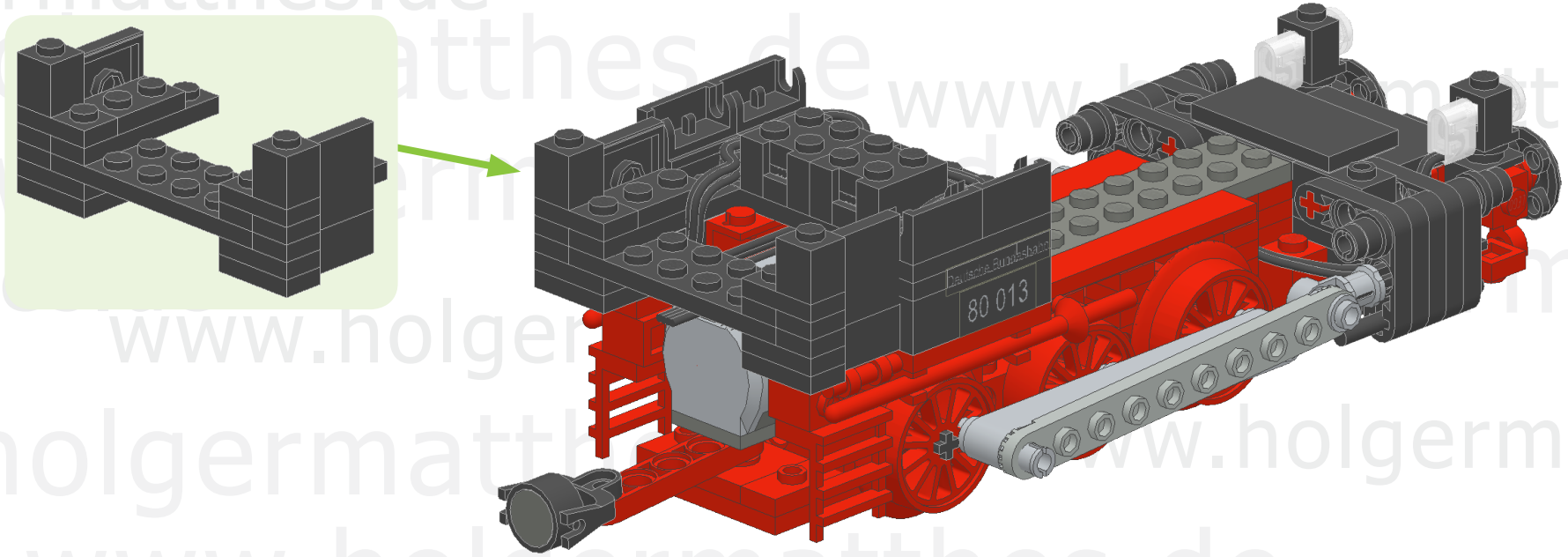

35

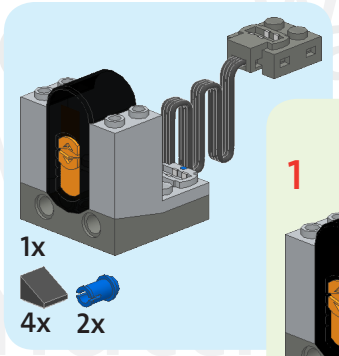

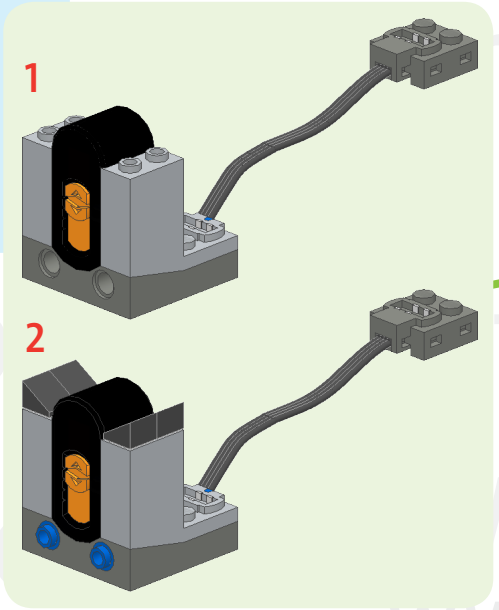

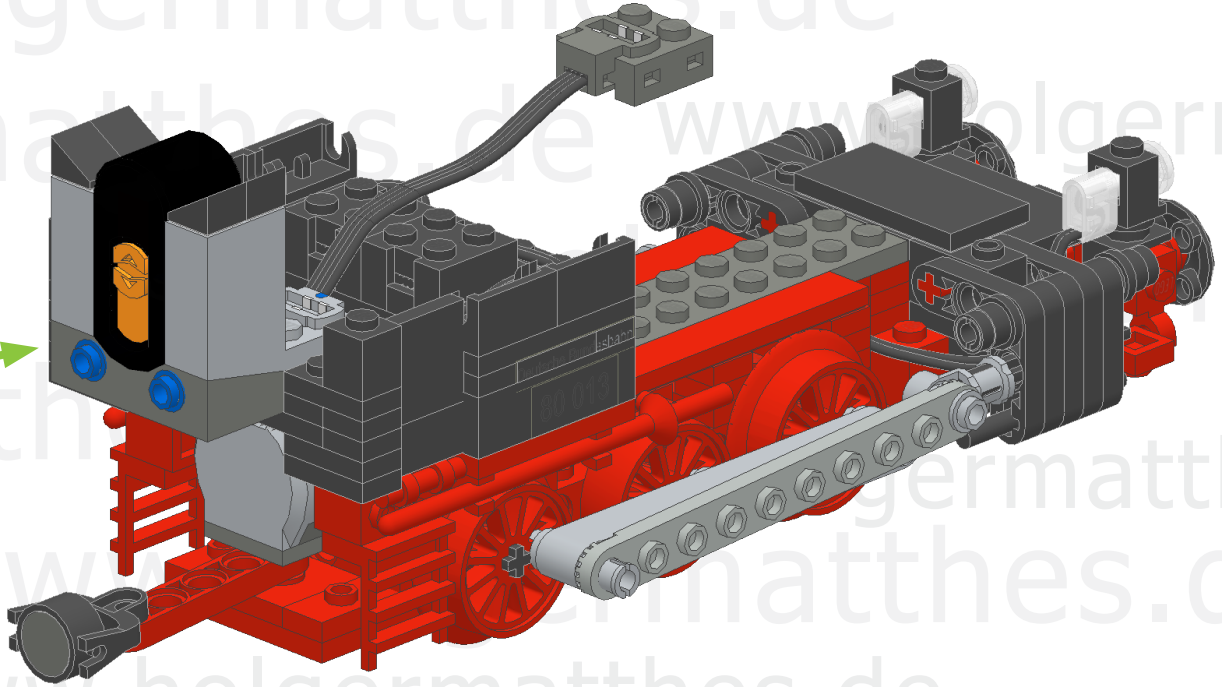

36

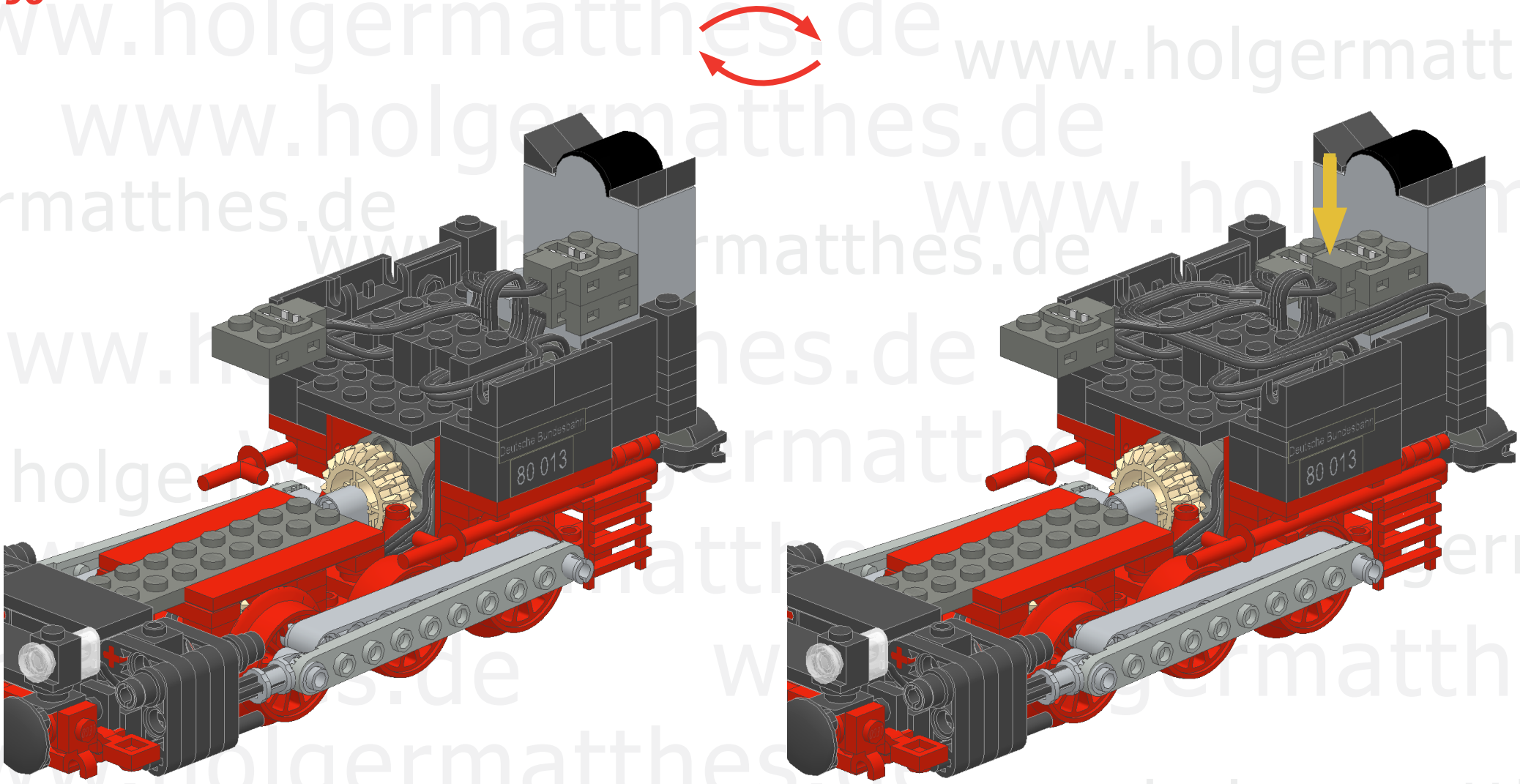

www.holgermatthes.de

37

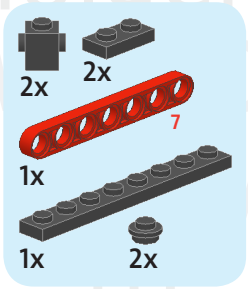

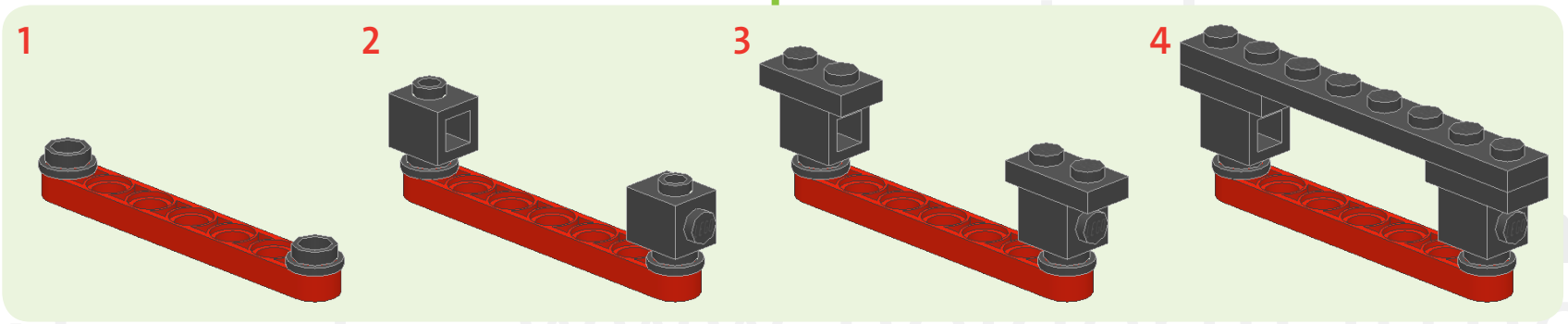

38

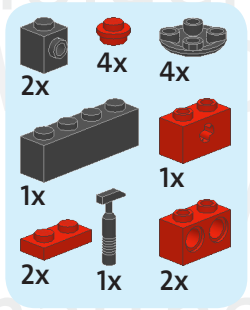

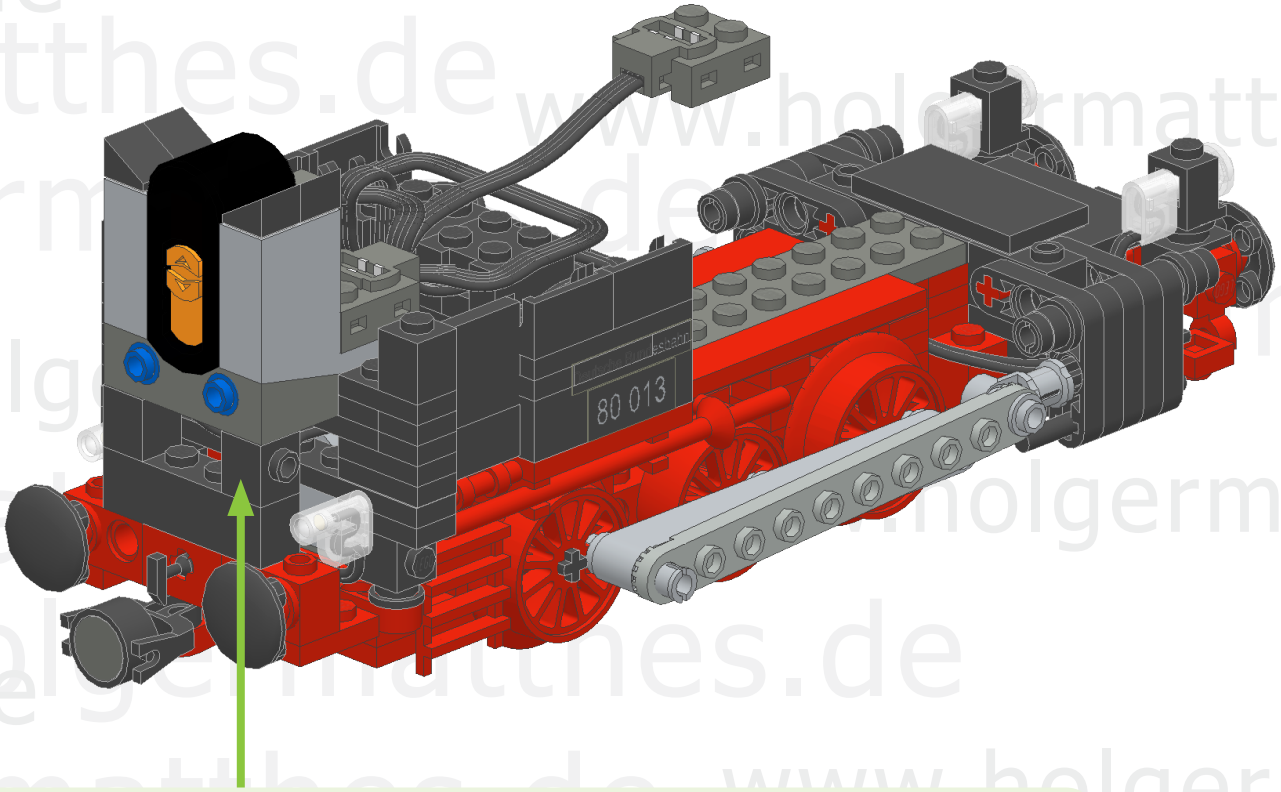

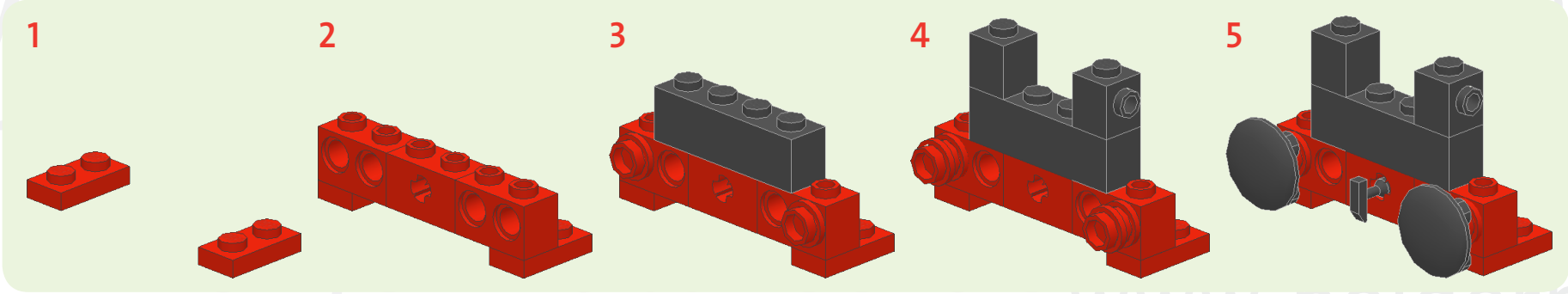

www.holgermatthes.de

39

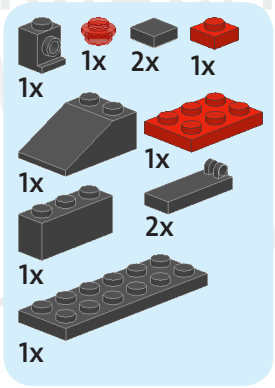

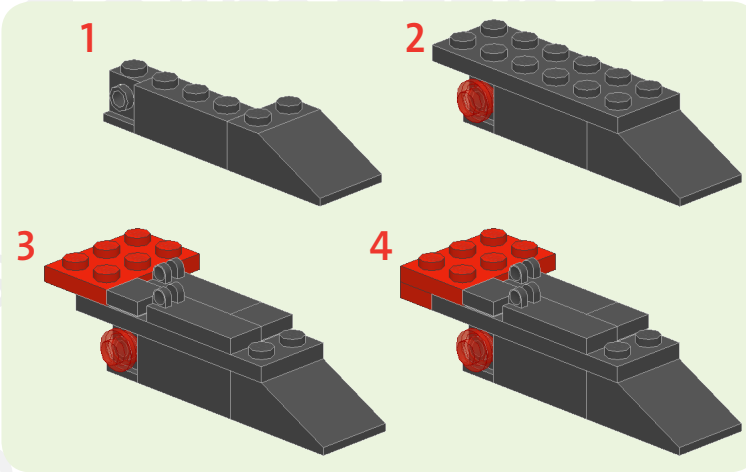

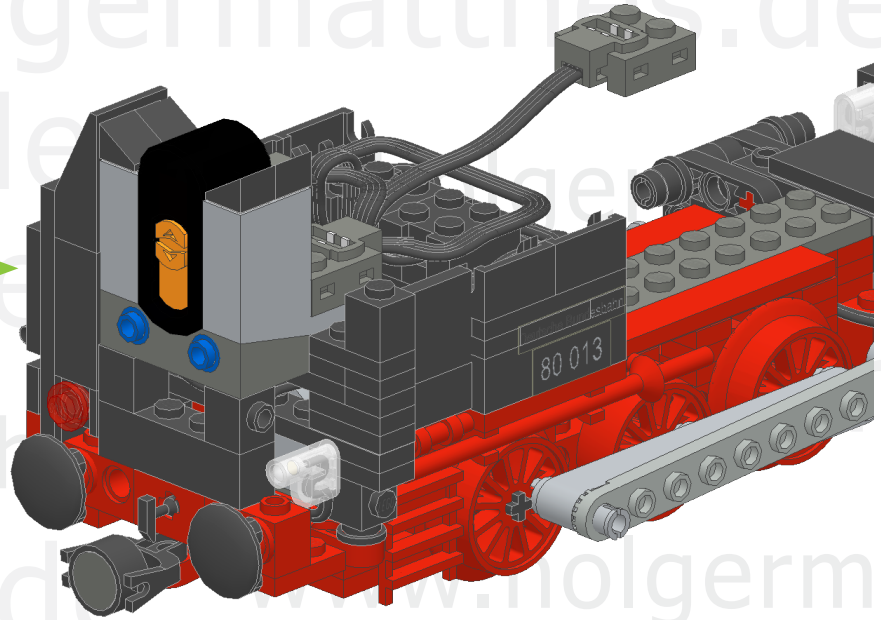

40

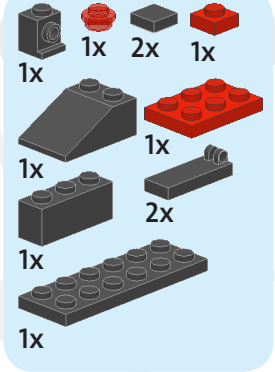

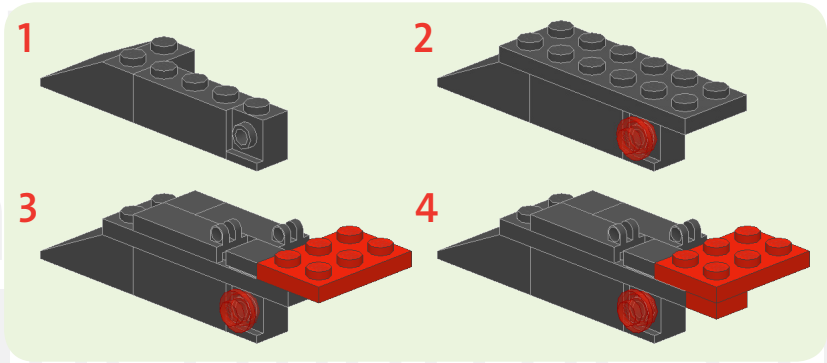

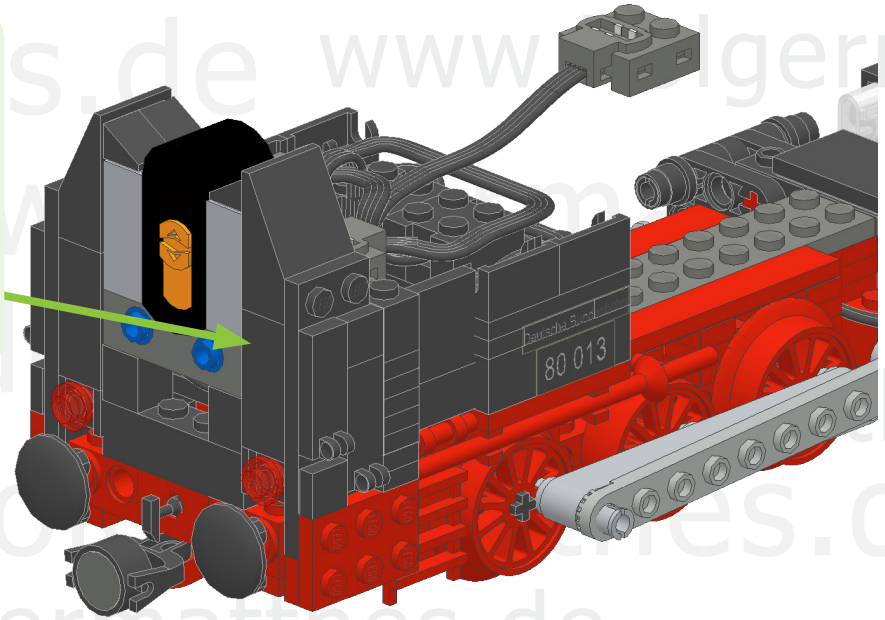

www.holgermatthes.de

41

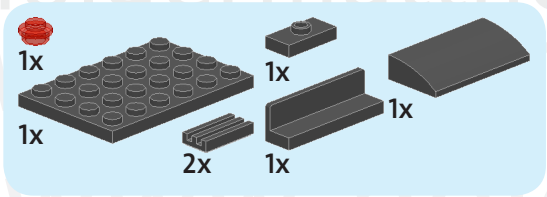

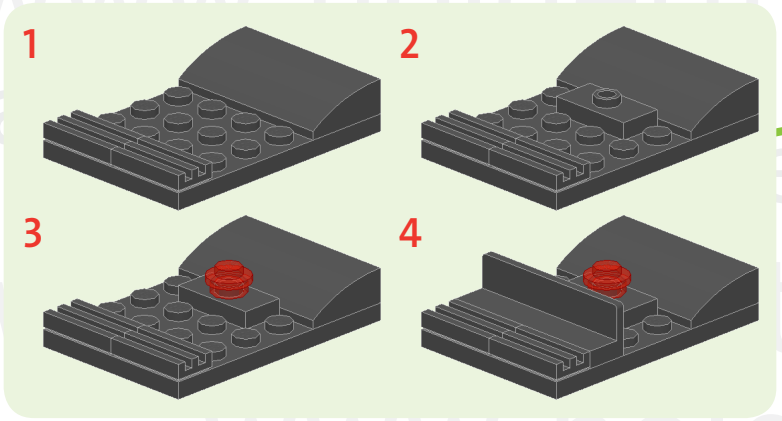

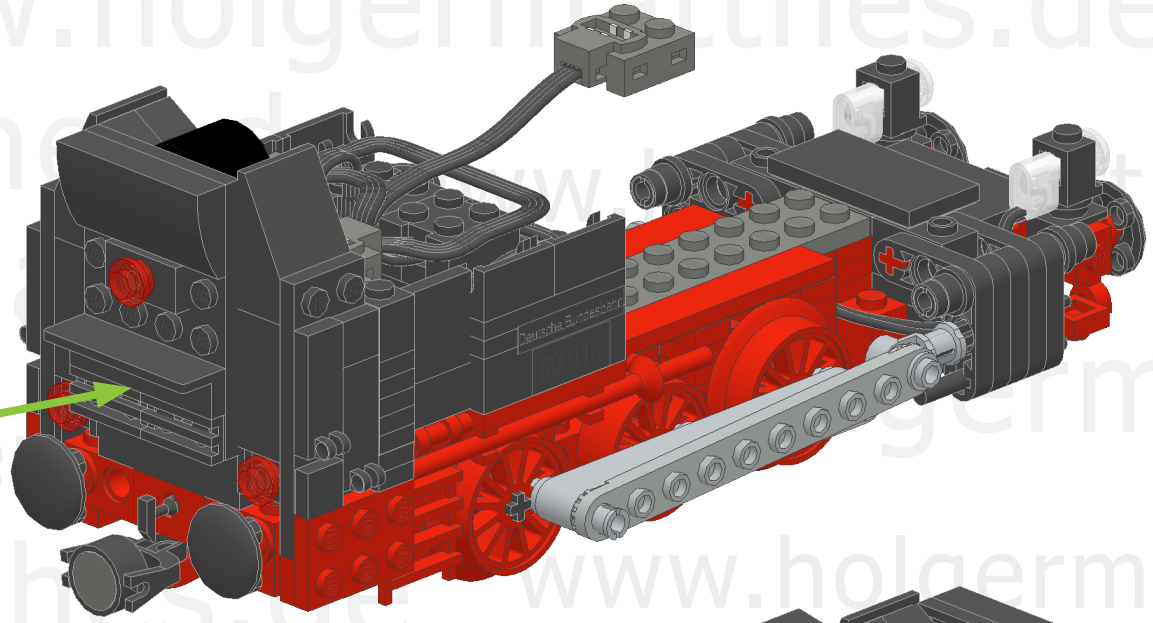

42

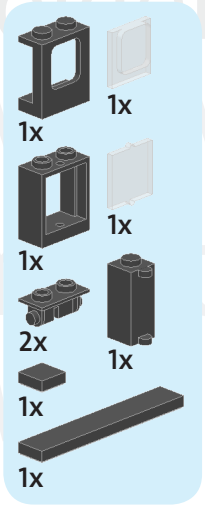

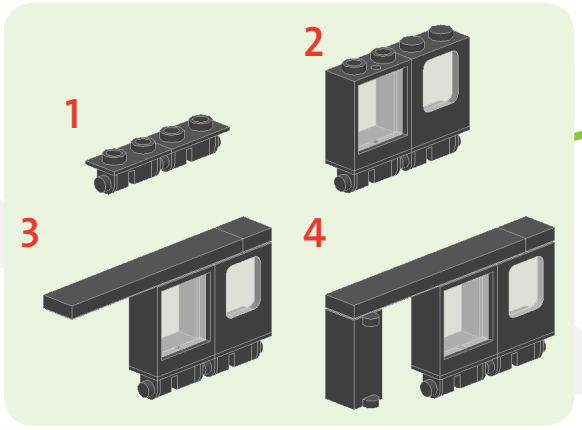

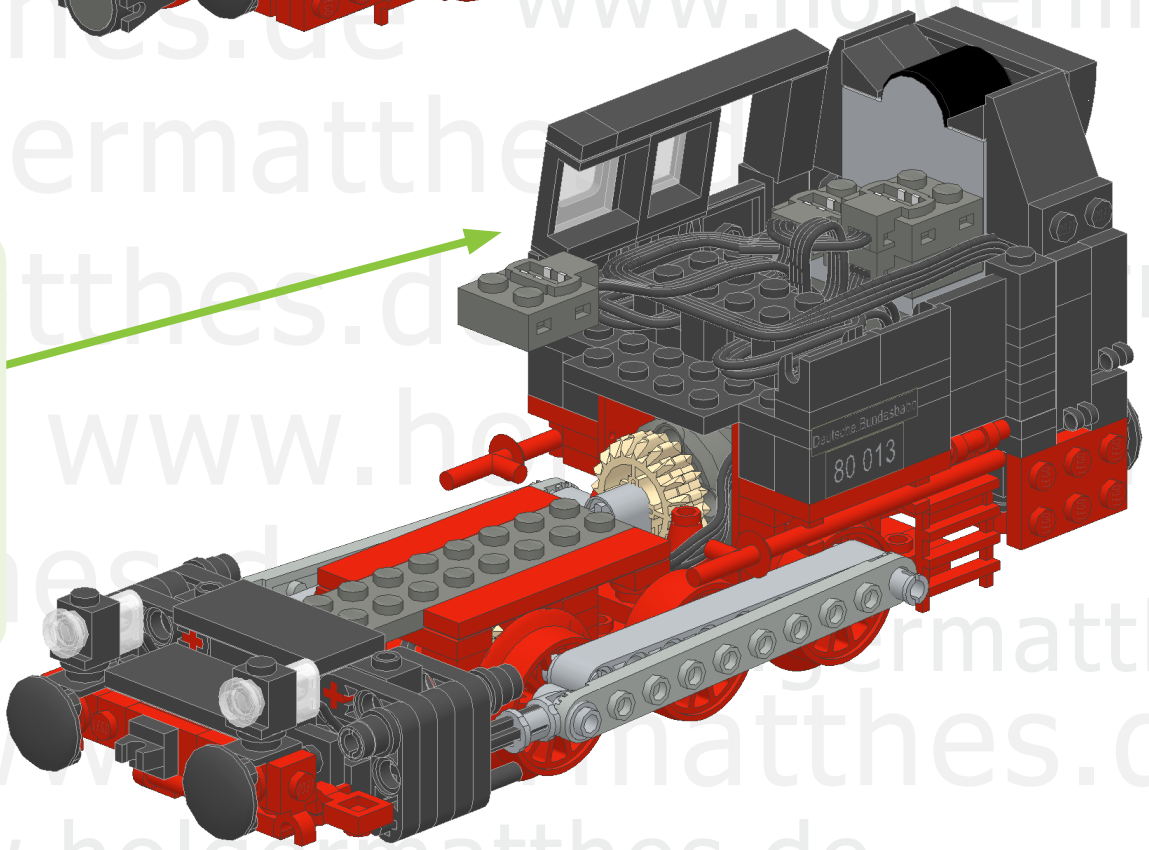

43

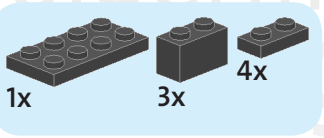

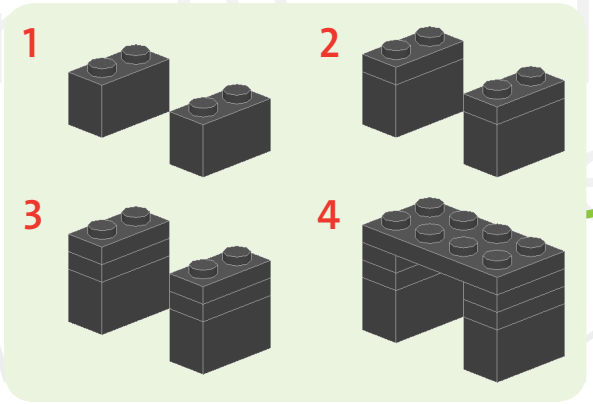

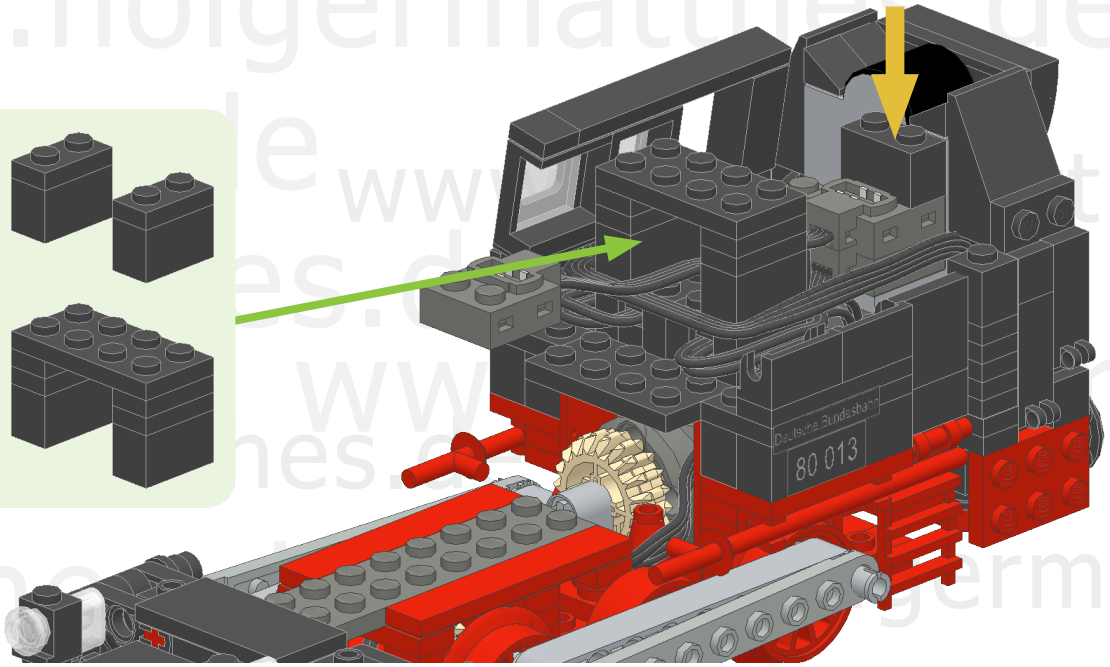

44

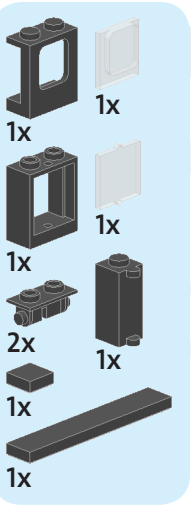

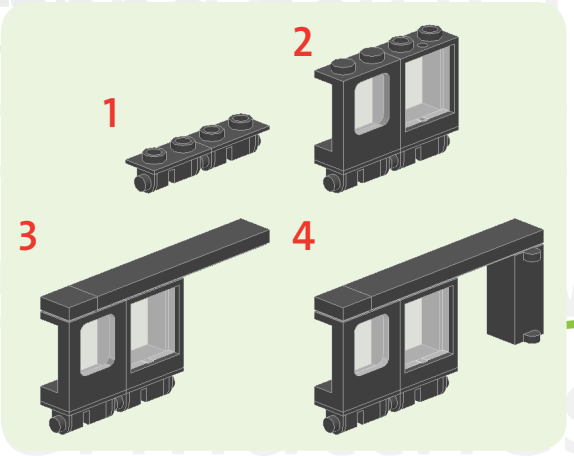

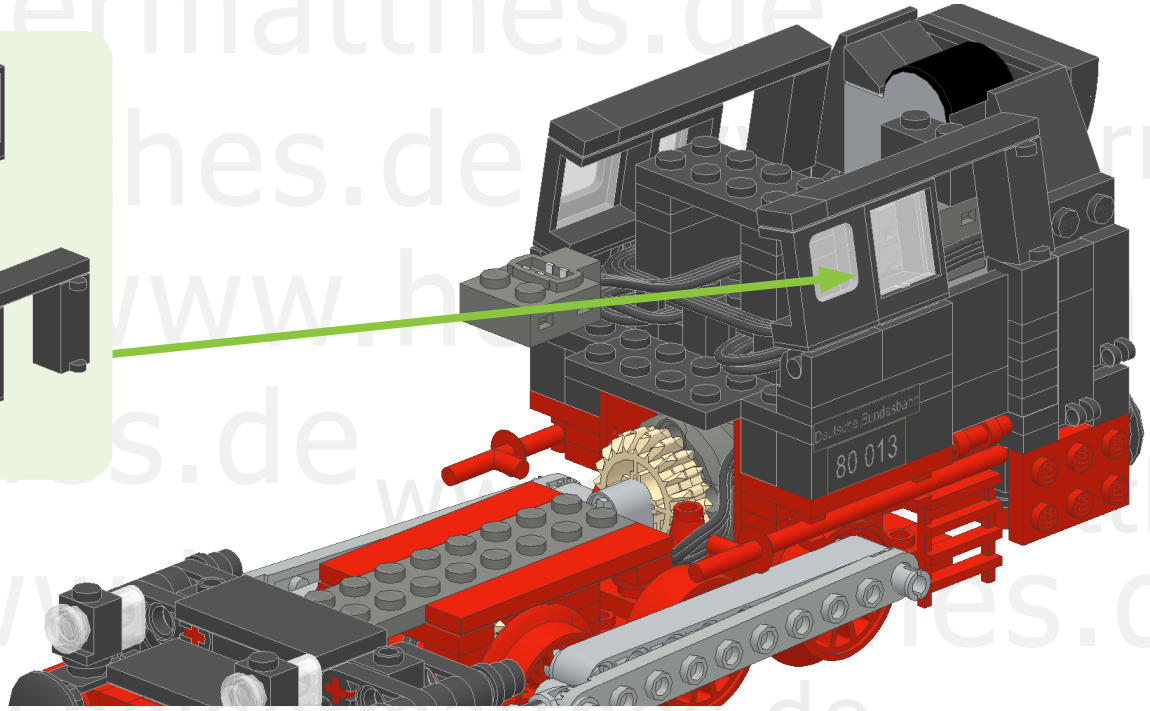

45

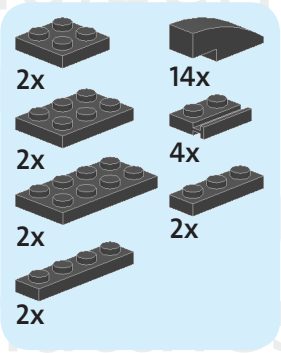

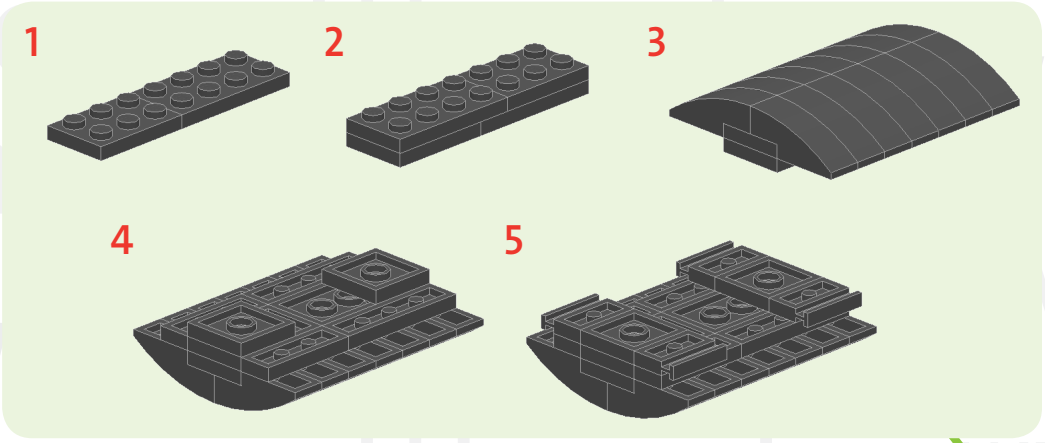

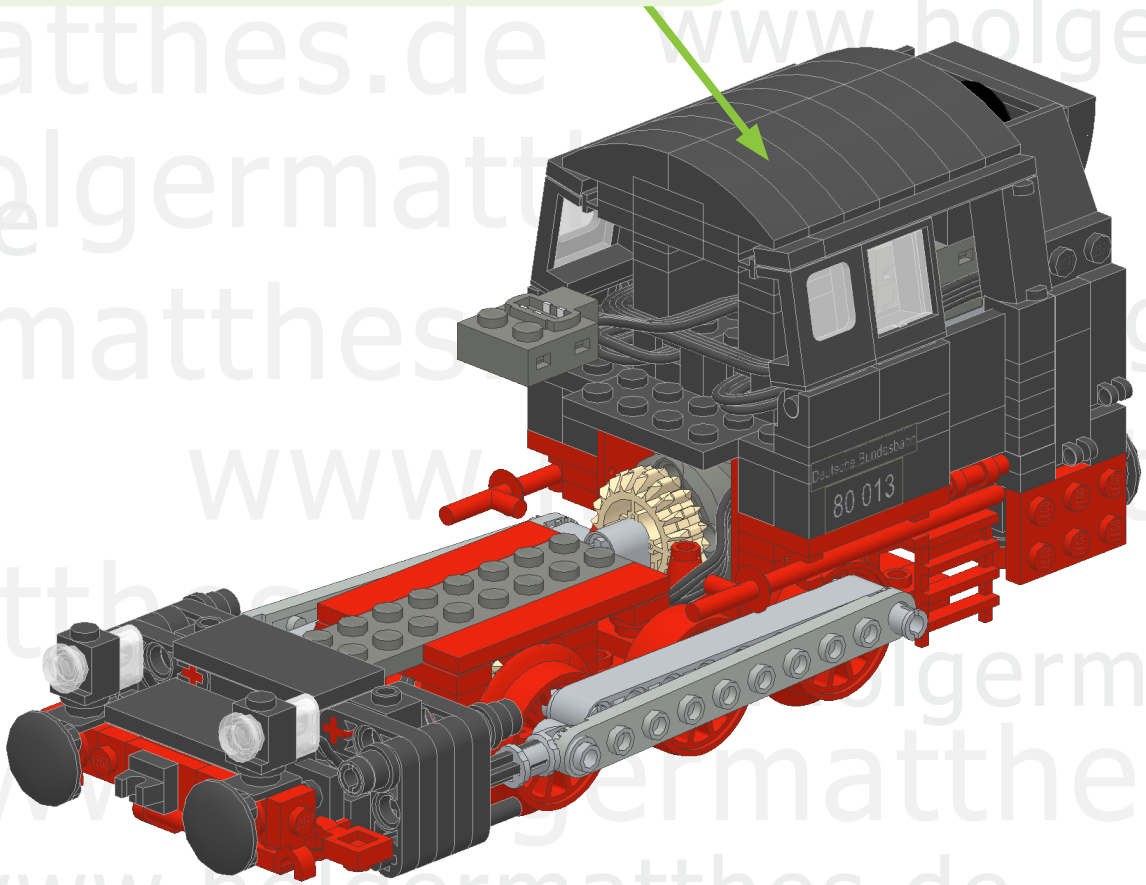

46

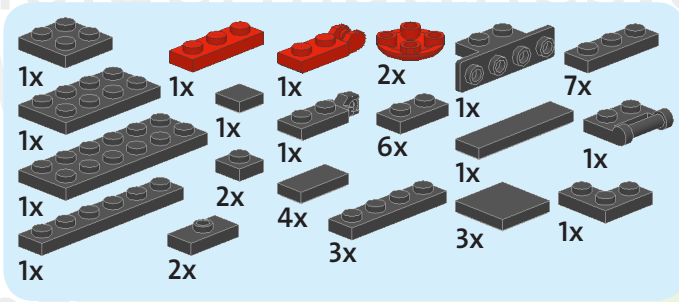

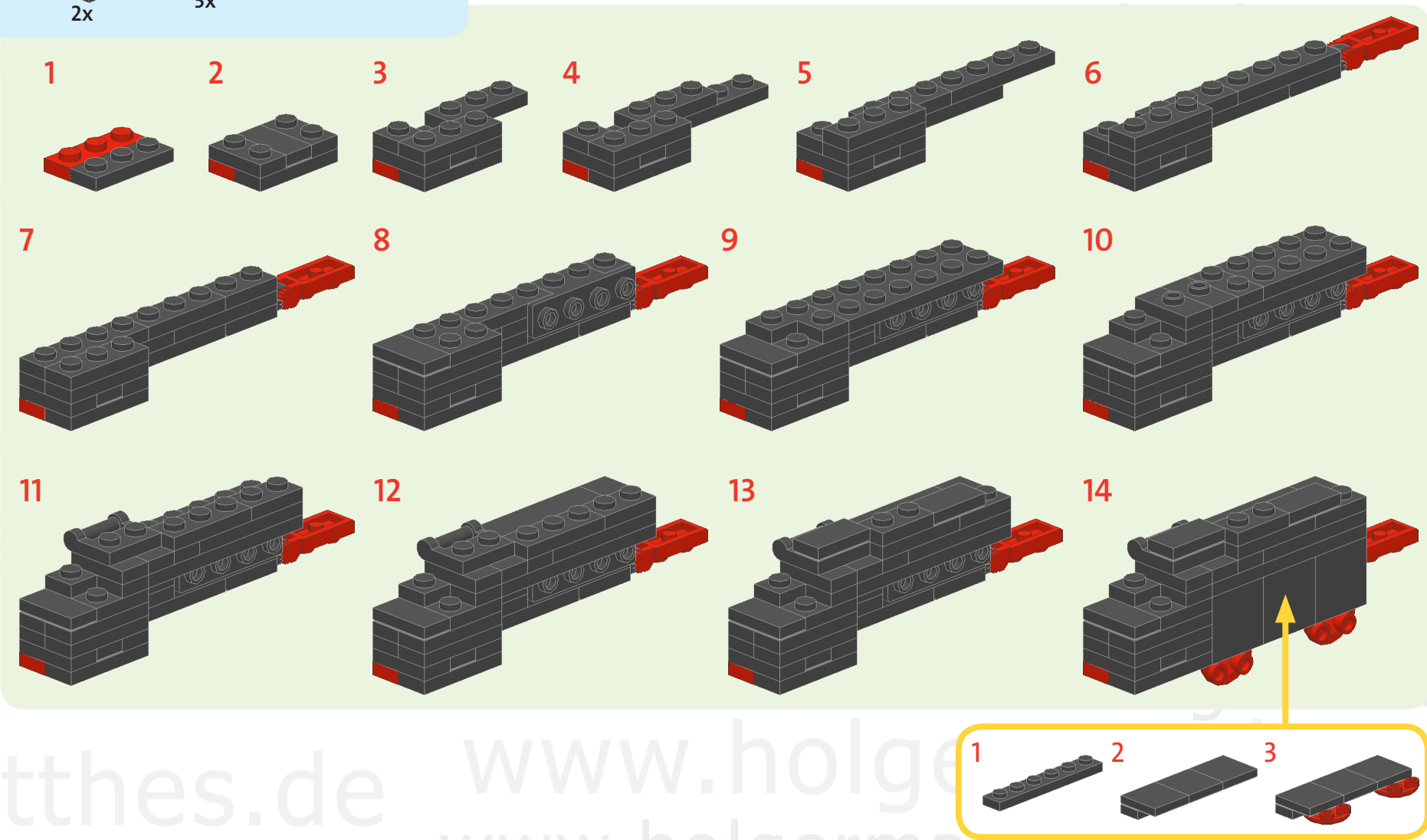

www.holgermatthes.de

47

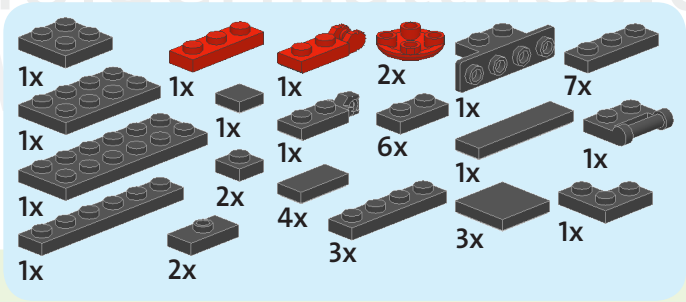

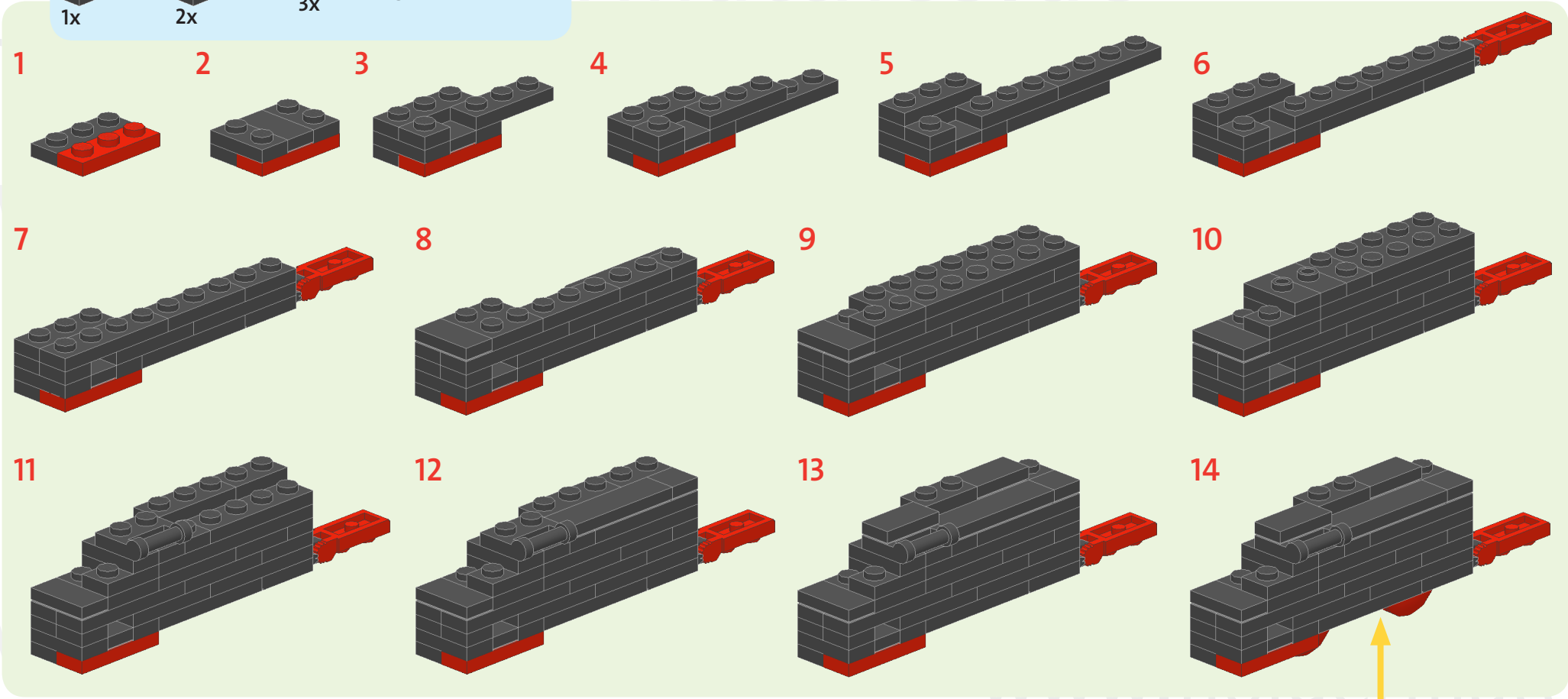

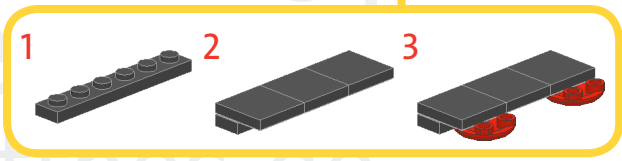

www.holgermatthes.de

48

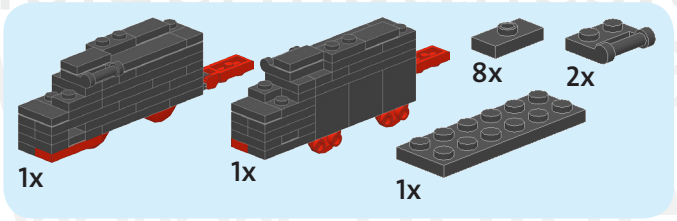
1x
1x
8x
2x
1x

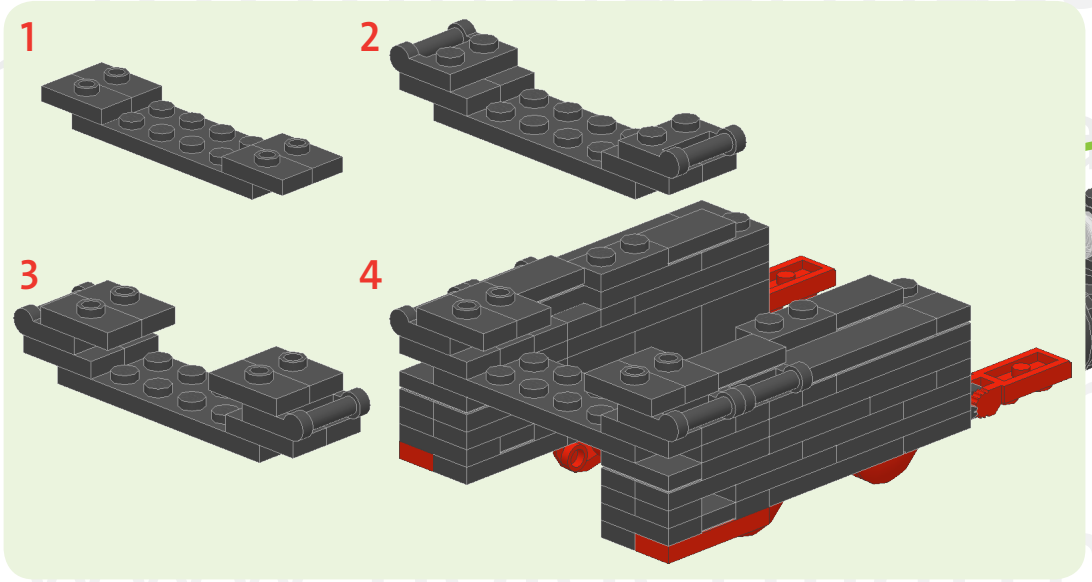
1
2
3
4

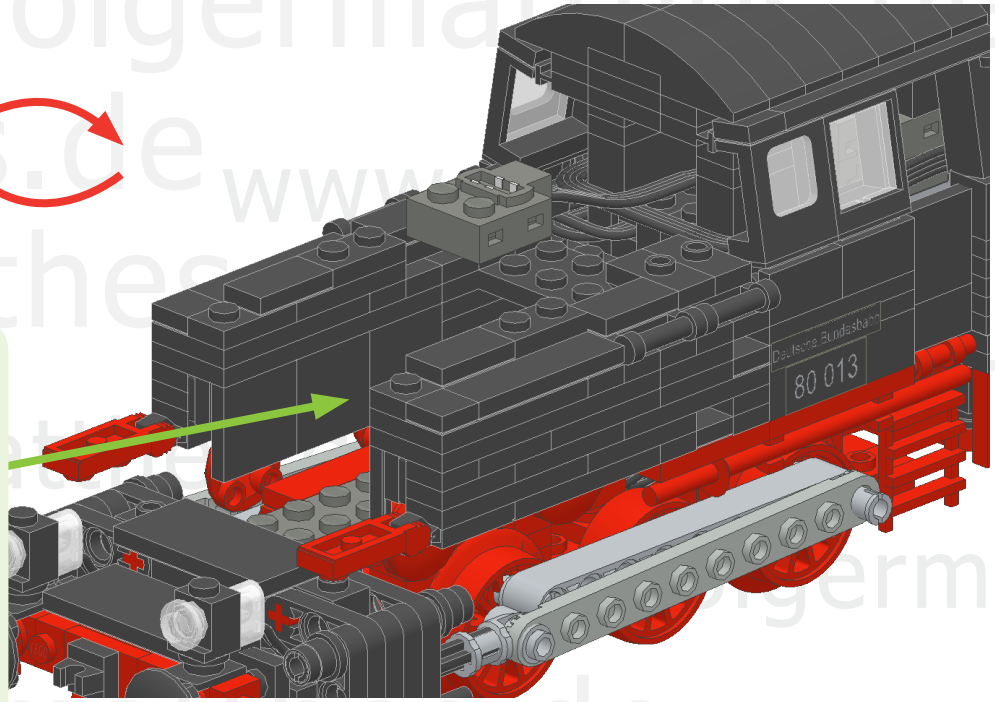
Deutsche Bundesbahn
80 013

49

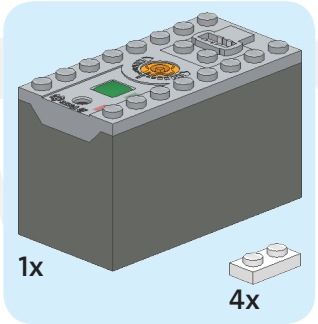
1x
4x

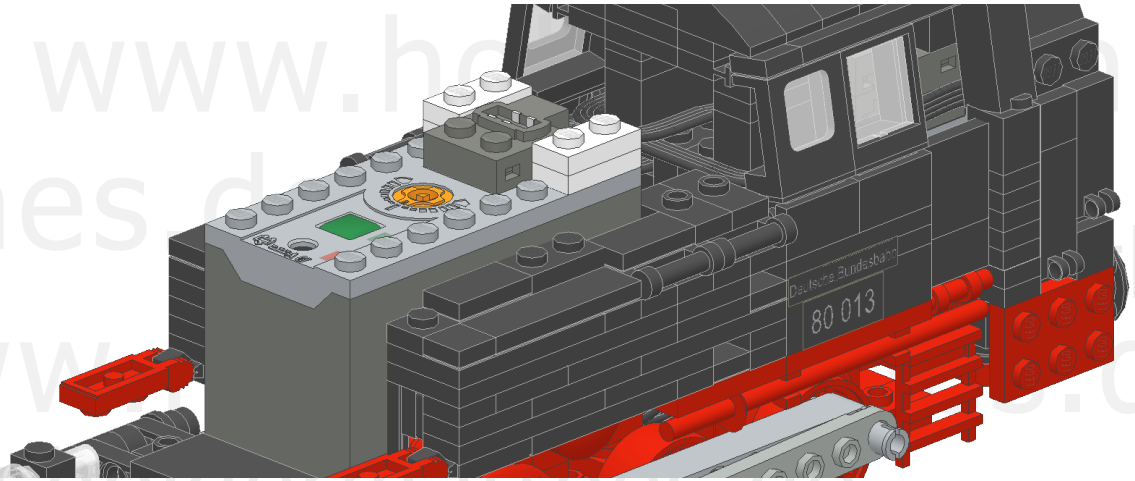
Deutsche Bundesbahn
80 013

www.holgermatthes.de

50

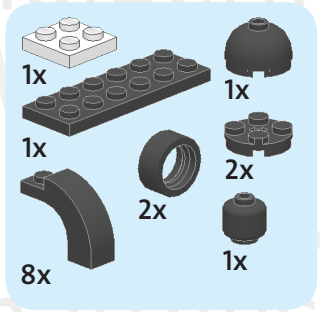

www.holgermatthes.de

51

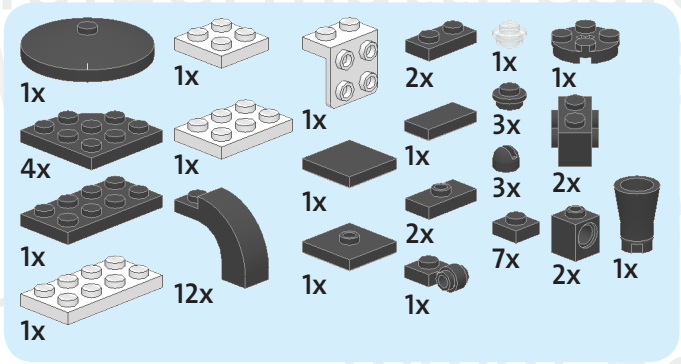

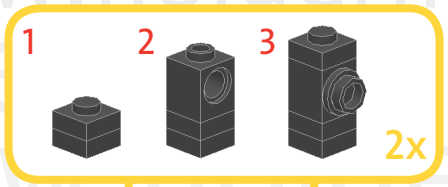

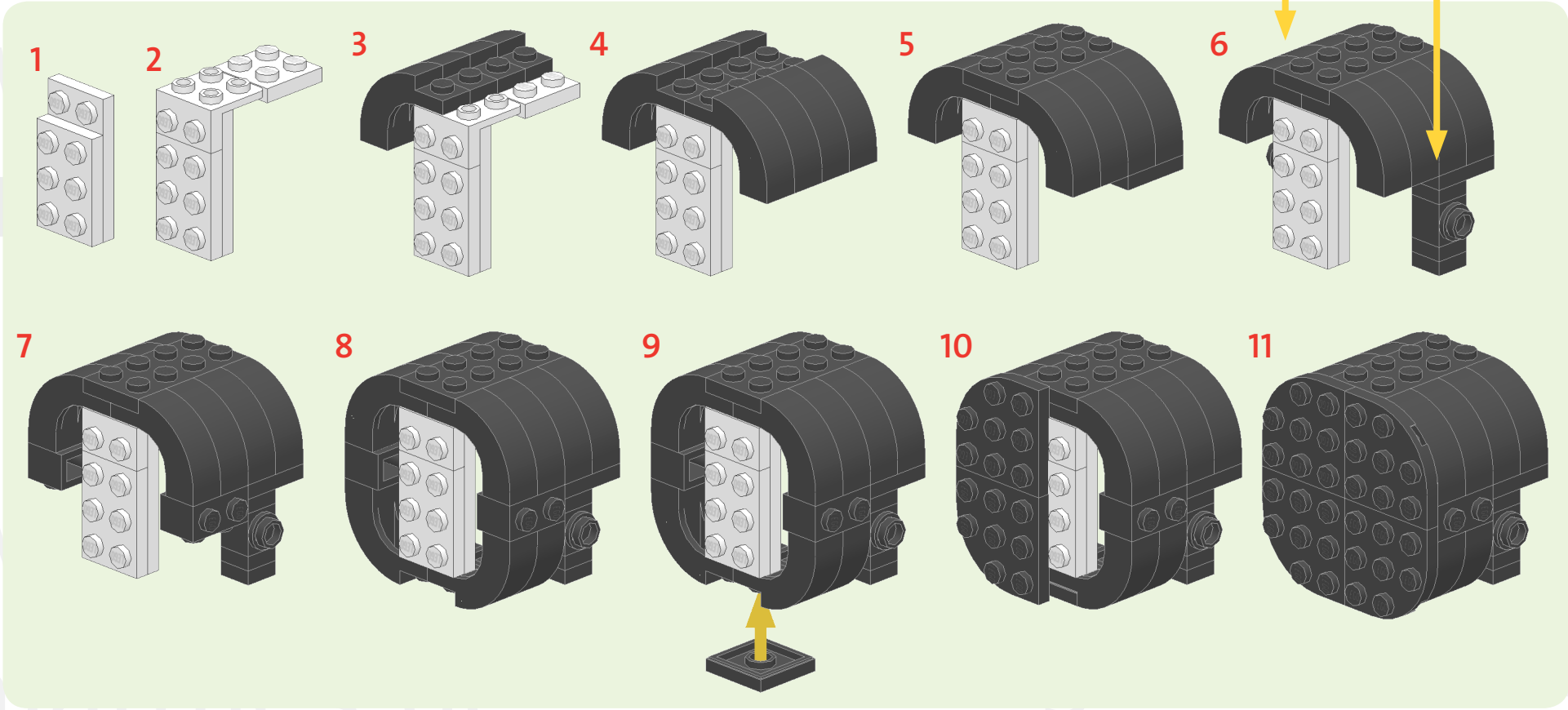

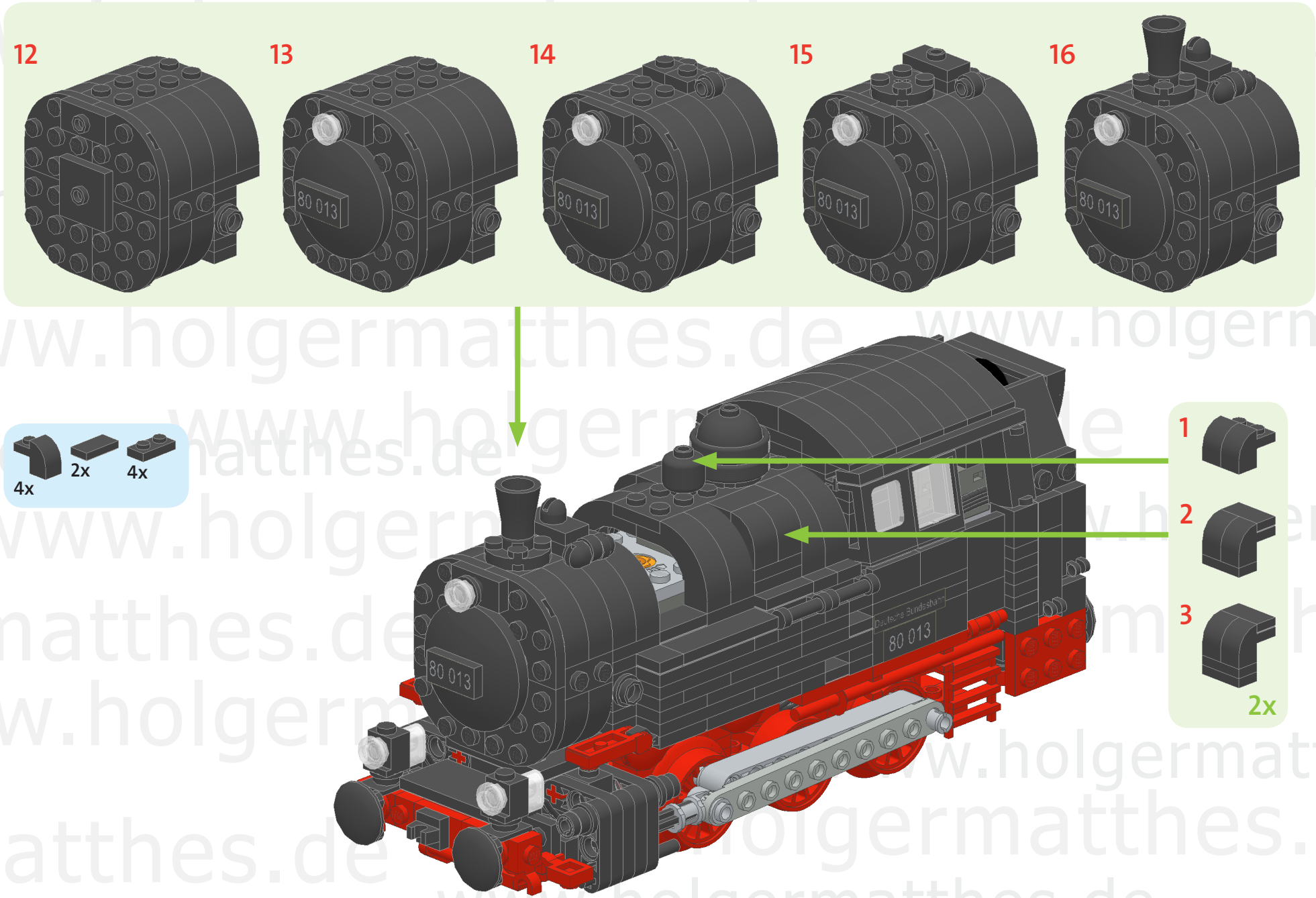

www.holgermatthes.de

www.holgermatthes.de

53

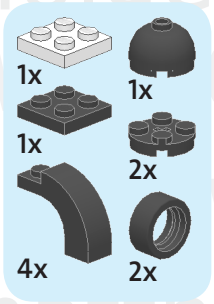

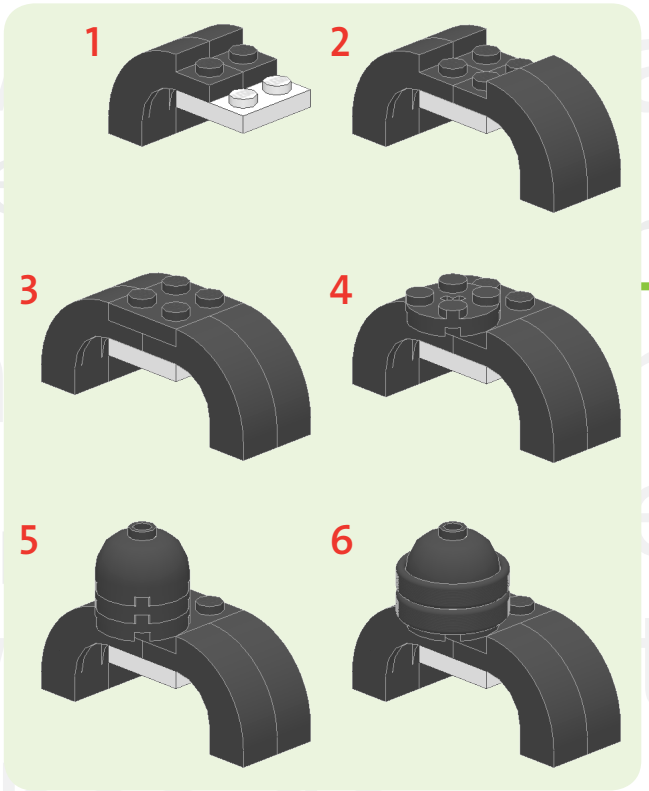

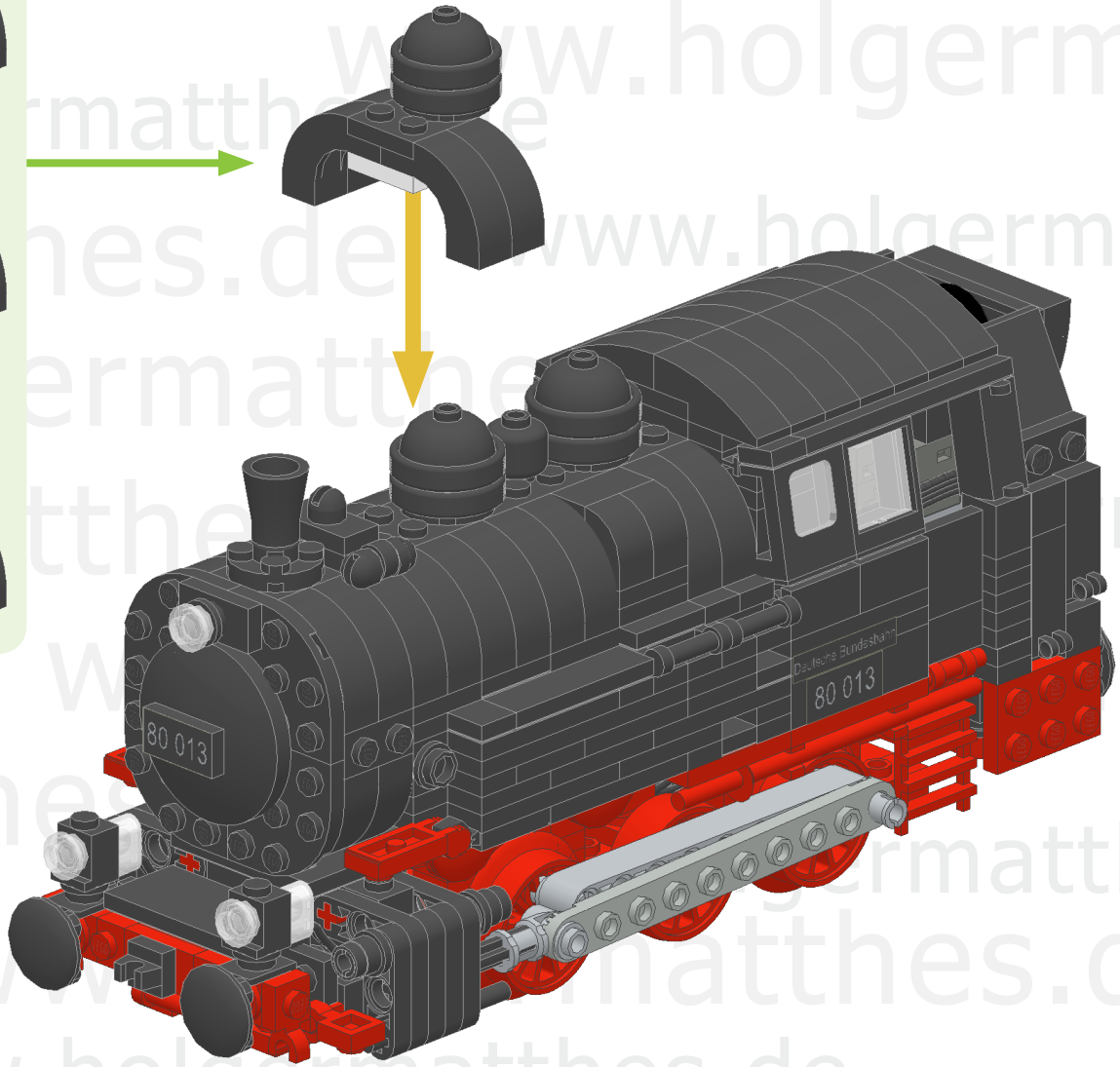

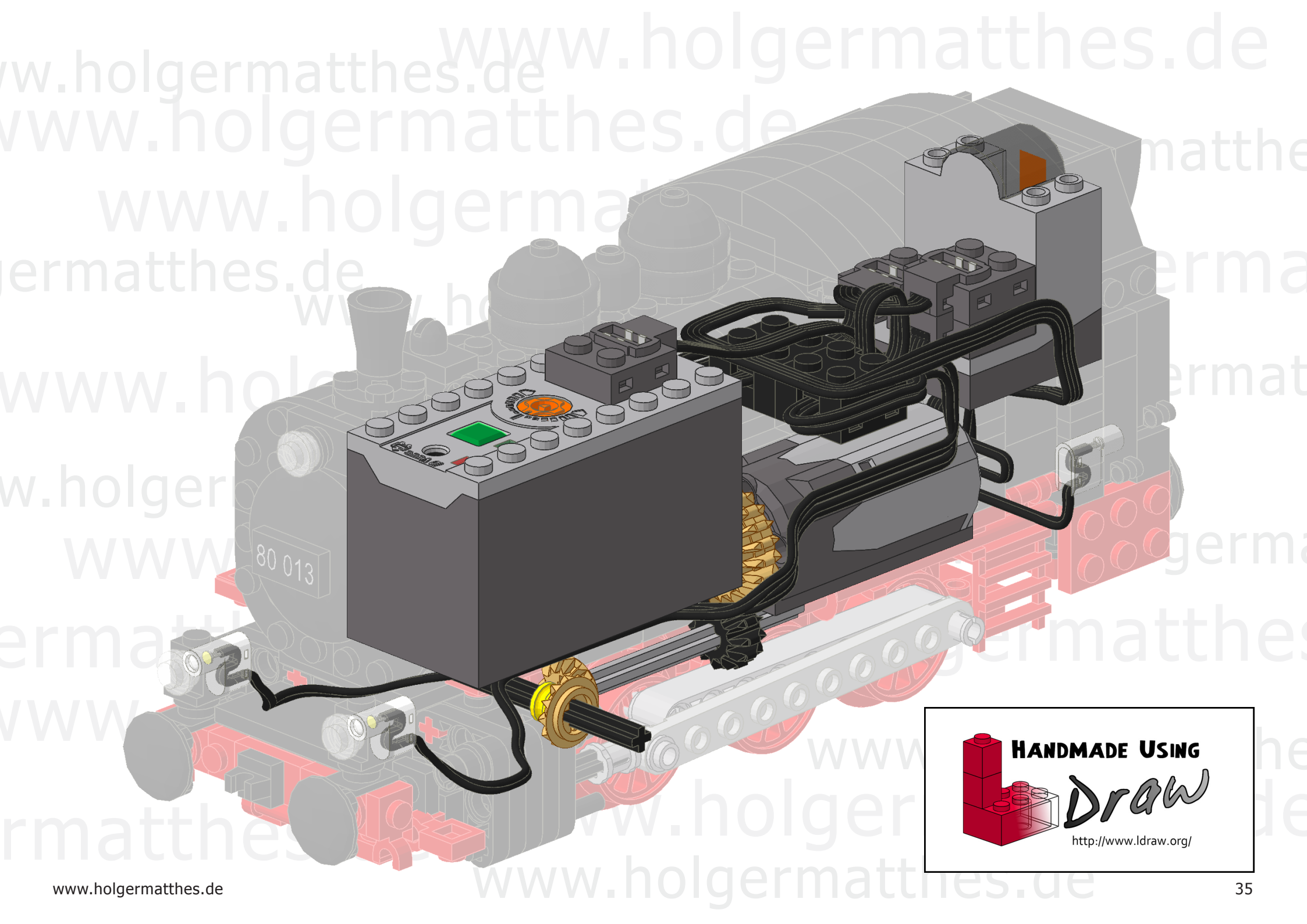

www.holgermatthes.de

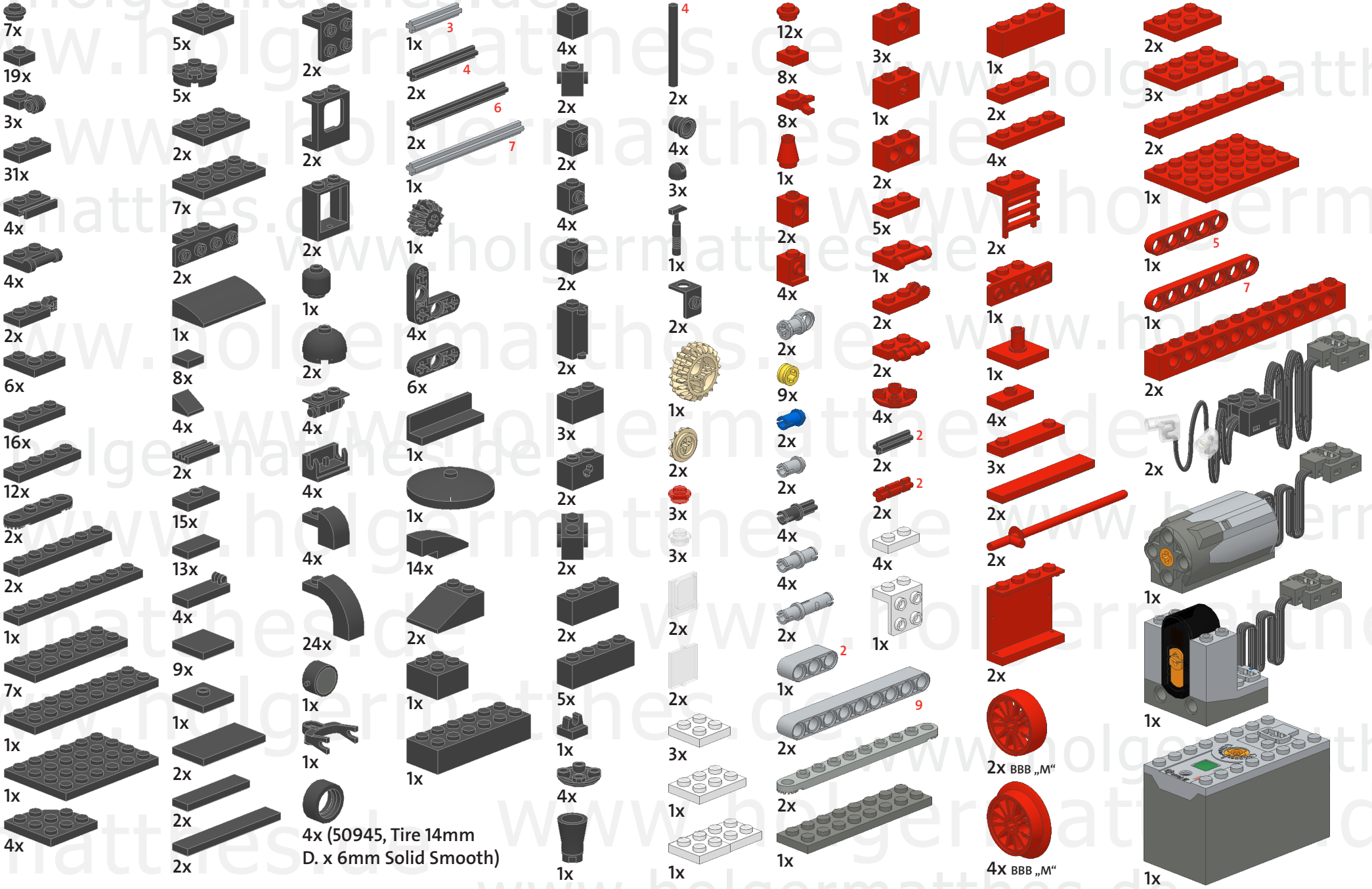

4x (50945, Tire 14mm D. x 6mm Solid Smooth)

www.holgermatthes.de

BR 80 – Teileliste – www.holgermatthes.de/bricks

Anzahl der Modelle: **1**

Teilenumme	Farbnummer (ML	Farbname (Bricklink)	Anzahl	Beschreibung	Teil bei Bricklink	Relevant für Farbgebu	Anmerkung
6005	0	Black	24	Arch 1 x 3 x 2 with Curved Top	https://www.bricklink.com/v2/catalog/catalogitem.page?P=6005		
30374	0	Black	2	Bar 4L Light Sabre Blade	https://www.bricklink.com/v2/catalog/catalogitem.page?P=30374		
42446	0	Black	2	Bracket 1 x 1 - 1 x 1 Neck Bracket with Back Stud	https://www.bricklink.com/v2/catalog/catalogitem.page?P=42446		
2436b	0	Black	2	Bracket 1 x 2 - 1 x 4 with Rounded Corners	https://www.bricklink.com/v2/catalog/catalogitem.page?P=2436b		
2436b	4	Red	1	Bracket 1 x 2 - 1 x 4 with Rounded Corners	https://www.bricklink.com/v2/catalog/catalogitem.page?P=2436b		
44728	0	Black	2	Bracket 1 x 2 - 2 x 2	https://www.bricklink.com/v2/catalog/catalogitem.page?P=44728		
44728	15	White	1	Bracket 1 x 2 - 2 x 2	https://www.bricklink.com/v2/catalog/catalogitem.page?P=44728		
3005	0	Black	4	Brick 1 x 1	https://www.bricklink.com/v2/catalog/catalogitem.page?P=3005		
4070	0	Black	4	Brick 1 x 1 with Headlight	https://www.bricklink.com/v2/catalog/catalogitem.page?P=4070		
4070	4	Red	4	Brick 1 x 1 with Headlight	https://www.bricklink.com/v2/catalog/catalogitem.page?P=4070		
87087	0	Black	2	Brick 1 x 1 with Stud on 1 Side	https://www.bricklink.com/v2/catalog/catalogitem.page?P=87087		
47905	0	Black	2	Brick 1 x 1 with Studs on Two Opposite Sides	https://www.bricklink.com/v2/catalog/catalogitem.page?P=47905		
3581	0	Black	2	Brick 1 x 1 x 2 with Shutter Holder	https://www.bricklink.com/v2/catalog/catalogitem.page?P=3581		
3004	0	Black	3	Brick 1 x 2	https://www.bricklink.com/v2/catalog/catalogitem.page?P=3004		
52107	0	Black	2	Brick 1 x 2 with Studs on Sides	https://www.bricklink.com/v2/catalog/catalogitem.page?P=52107		
3622	0	Black	2	Brick 1 x 3	https://www.bricklink.com/v2/catalog/catalogitem.page?P=3622		
3010	0	Black	5	Brick 1 x 4	https://www.bricklink.com/v2/catalog/catalogitem.page?P=3010		
3010	4	Red	1	Brick 1 x 4	https://www.bricklink.com/v2/catalog/catalogitem.page?P=3010		
6091	0	Black	4	Brick 2 x 1 x 1 & 1/3 with Curved Top	https://www.bricklink.com/v2/catalog/catalogitem.page?P=6091		
3003	0	Black	1	Brick 2 x 2	https://www.bricklink.com/v2/catalog/catalogitem.page?P=3003		
2456	0	Black	1	Brick 2 x 6	https://www.bricklink.com/v2/catalog/catalogitem.page?P=2456		
553	0	Black	2	Brick, Round 2 x 2 Dome Top	https://www.bricklink.com/v2/catalog/catalogitem.page?P=553		
4589	4	Red	1	Cone 1 x 1	https://www.bricklink.com/v2/catalog/catalogitem.page?P=4589		
2654	0	Black	4	Dish 2 x 2	https://www.bricklink.com/v2/catalog/catalogitem.page?P=2654		
2654	4	Red	4	Dish 2 x 2	https://www.bricklink.com/v2/catalog/catalogitem.page?P=2654		
3960	0	Black	1	Dish 4 x 4 Inverted	https://www.bricklink.com/v2/catalog/catalogitem.page?P=3960		
58123	71	Light Bluish Gray	1	Electric Power Functions IR Receiver	https://www.bricklink.com/v2/catalog/catalogitem.page?P=58123c01		Set 8884
61930c01	0	Black	2	Electric Power Functions Light	https://www.bricklink.com/v2/catalog/catalogitem.page?P=61930c01		Set 8870
58120c01	71	Light Bluish Gray	1	Electric Power Functions Medium Motor	https://www.bricklink.com/v2/catalog/catalogitem.page?P=58120c01		Set 8883
84599	71	Light Bluish Gray	1	Electric Power Functions Rechargeable Battery Box (Complete)	https://www.bricklink.com/v2/catalog/catalogitem.page?P=84599		Set 88000 / 8878
64227	71	Light Bluish Gray	1	Electric, Power Functions IR Speed Remote Control Unit with Dark Bluish Gray Base	https://www.bricklink.com/v2/catalog/catalogitem.page?P=64227c01	PF Fernbedienung	Set 8879
60601	47	Trans Clear	2	Glass for Window 1 x 2 x 2 Flat Front	https://www.bricklink.com/v2/catalog/catalogitem.page?P=60601		
4862	47	Trans Clear	2	Glass for Window 1 x 2 x 2 Plane	https://www.bricklink.com/v2/catalog/catalogitem.page?P=4862		
3937	0	Black	4	Hinge 1 x 2 Base	https://www.bricklink.com/v2/catalog/catalogitem.page?P=3937		
3938	0	Black	4	Hinge 1 x 2 Top	https://www.bricklink.com/v2/catalog/catalogitem.page?P=3938		
4592	0	Black	3	Hinge Control Stick Base	https://www.bricklink.com/v2/catalog/catalogitem.page?P=4592		
44302	4	Red	2	Hinge Plate 1 x 2 Locking with Dual Finger on End Vertical	https://www.bricklink.com/v2/catalog/catalogitem.page?P=44302		
44301	0	Black	2	Hinge Plate 1 x 2 Locking with Single Finger on End Vertical	https://www.bricklink.com/v2/catalog/catalogitem.page?P=44301		
4531	0	Black	4	Hinge Tile 1 x 2 with 2 Fingers	https://www.bricklink.com/v2/catalog/catalogitem.page?P=4531		
2959c01	0	Black	1	Magnet Cylindrical in Casing (Complete)	https://www.bricklink.com/v2/catalog/catalogitem.page?P=73092		
3626b	0	Black	1	Minifig Head with Hollow Stud	https://www.bricklink.com/v2/catalog/catalogitem.page?P=3626b		

BR 80 – Teileliste – www.holgermatthes.de/bricks

Anzahl der Modelle: **1**

Teilenumme	Farbnummer (ML	Farbname (Bricklink)	Anzahl	Beschreibung	Teil bei Bricklink	Relevant für Farbgebu	Anmerkung
3849	4	Red	2	Minifig Lance	https://www.bricklink.com/v2/catalog/catalogitem.page?P=3849		
55295	0	Black	1	Minifig Tool Hammer	https://www.bricklink.com/v2/catalog/catalogitem.page?P=6246b		
30413	0	Black	1	Panel 1 x 4 x 1 with Rounded Corners	https://www.bricklink.com/v2/catalog/catalogitem.page?P=30413		
4215	4	Red	2	Panel 1 x 4 x 3	https://www.bricklink.com/v2/catalog/catalogitem.page?P=4215b		
2536	0	Black	1	Plant Tree Palm Trunk	https://www.bricklink.com/v2/catalog/catalogitem.page?P=2536d		
3024	0	Black	19	Plate 1 x 1	https://www.bricklink.com/v2/catalog/catalogitem.page?P=3024		
3024	4	Red	8	Plate 1 x 1	https://www.bricklink.com/v2/catalog/catalogitem.page?P=3024		
4073	0	Black	7	Plate 1 x 1 Round	https://www.bricklink.com/v2/catalog/catalogitem.page?P=4073		
4073	4	Red	12	Plate 1 x 1 Round	https://www.bricklink.com/v2/catalog/catalogitem.page?P=4073		
4073	36	Trans Red	3	Plate 1 x 1 Round	https://www.bricklink.com/v2/catalog/catalogitem.page?P=4073		
4073	47	Trans Clear	3	Plate 1 x 1 Round	https://www.bricklink.com/v2/catalog/catalogitem.page?P=4073		
6019	4	Red	8	Plate 1 x 1 with Clip Horizontal (Open U-Clip)	https://www.bricklink.com/v2/catalog/catalogitem.page?P=6019		
4081b	0	Black	3	Plate 1 x 1 with Clip Light Type 2	https://www.bricklink.com/v2/catalog/catalogitem.page?P=4081b		
3023	0	Black	31	Plate 1 x 2	https://www.bricklink.com/v2/catalog/catalogitem.page?P=3023		
3023	4	Red	5	Plate 1 x 2	https://www.bricklink.com/v2/catalog/catalogitem.page?P=3023		
3023	15	White	4	Plate 1 x 2	https://www.bricklink.com/v2/catalog/catalogitem.page?P=3023		
32028	0	Black	4	Plate 1 x 2 with Door Rail	https://www.bricklink.com/v2/catalog/catalogitem.page?P=32028		
3794b	0	Black	15	Plate 1 x 2 with Groove with 1 Centre Stud	https://www.bricklink.com/v2/catalog/catalogitem.page?P=3794b		
3794b	4	Red	4	Plate 1 x 2 with Groove with 1 Centre Stud	https://www.bricklink.com/v2/catalog/catalogitem.page?P=3794b		
2540	4	Red	2	Plate 1 x 2 with Handle	https://www.bricklink.com/v2/catalog/catalogitem.page?P=2540		
48336	0	Black	4	Plate 1 x 2 with Handle Type 2	https://www.bricklink.com/v2/catalog/catalogitem.page?P=48336		
48336	4	Red	1	Plate 1 x 2 with Handle Type 2	https://www.bricklink.com/v2/catalog/catalogitem.page?P=48336		
4175	4	Red	2	Plate 1 x 2 with Ladder	https://www.bricklink.com/v2/catalog/catalogitem.page?P=4175		
3623	0	Black	16	Plate 1 x 3	https://www.bricklink.com/v2/catalog/catalogitem.page?P=3623		
3623	4	Red	2	Plate 1 x 3	https://www.bricklink.com/v2/catalog/catalogitem.page?P=3623		
3710	0	Black	12	Plate 1 x 4	https://www.bricklink.com/v2/catalog/catalogitem.page?P=3710		
3710	4	Red	4	Plate 1 x 4	https://www.bricklink.com/v2/catalog/catalogitem.page?P=3710		
3666	0	Black	2	Plate 1 x 6	https://www.bricklink.com/v2/catalog/catalogitem.page?P=3666		
3460	0	Black	2	Plate 1 x 8	https://www.bricklink.com/v2/catalog/catalogitem.page?P=3460		
3460	4	Red	2	Plate 1 x 8	https://www.bricklink.com/v2/catalog/catalogitem.page?P=3460		
3022	0	Black	5	Plate 2 x 2	https://www.bricklink.com/v2/catalog/catalogitem.page?P=3022		
3022	15	White	3	Plate 2 x 2	https://www.bricklink.com/v2/catalog/catalogitem.page?P=3022		
2420	0	Black	6	Plate 2 x 2 Corner	https://www.bricklink.com/v2/catalog/catalogitem.page?P=2420		
4032a	0	Black	5	Plate 2 x 2 Round with Axlehole Type 1	https://www.bricklink.com/v2/catalog/catalogitem.page?P=4032		
87580	0	Black	1	Plate 2 x 2 with Groove with 1 Center Stud	https://www.bricklink.com/v2/catalog/catalogitem.page?P=87580		
3021	0	Black	2	Plate 2 x 3	https://www.bricklink.com/v2/catalog/catalogitem.page?P=3021		
3021	4	Red	2	Plate 2 x 3	https://www.bricklink.com/v2/catalog/catalogitem.page?P=3021		
3021	15	White	1	Plate 2 x 3	https://www.bricklink.com/v2/catalog/catalogitem.page?P=3021		
3020	0	Black	7	Plate 2 x 4	https://www.bricklink.com/v2/catalog/catalogitem.page?P=3020		
3020	4	Red	3	Plate 2 x 4	https://www.bricklink.com/v2/catalog/catalogitem.page?P=3020		
3020	15	White	1	Plate 2 x 4	https://www.bricklink.com/v2/catalog/catalogitem.page?P=3020		

BR 80 – Teileliste – www.holgermatthes.de/bricks

Anzahl der Modelle: **1**

Teilenumme	Farbnummer (ML	Farbname (Bricklink)	Anzahl	Beschreibung	Teil bei Bricklink	Relevant für Farbgebu	Anmerkung
3795	0	Black	7	Plate 2 x 6	https://www.bricklink.com/v2/catalog/catalogitem.page?P=3795		
3034	0	Black	1	Plate 2 x 8	https://www.bricklink.com/v2/catalog/catalogitem.page?P=3034		
3034	72	Dark Bluish Gray	1	Plate 2 x 8	https://www.bricklink.com/v2/catalog/catalogitem.page?P=3034		
30357	0	Black	4	Plate 3 x 3 Corner Round	https://www.bricklink.com/v2/catalog/catalogitem.page?P=30357		
3032	0	Black	1	Plate 4 x 6	https://www.bricklink.com/v2/catalog/catalogitem.page?P=3032		
3032	4	Red	1	Plate 4 x 6	https://www.bricklink.com/v2/catalog/catalogitem.page?P=3032		
92593	4	Red	3	Plate, Modified 1 x 4 with 2 Studs	https://www.bricklink.com/v2/catalog/catalogitem.page?P=92593		
54200	0	Black	4	Slope Brick 31 1 x 1 x 0.667	https://www.bricklink.com/v2/catalog/catalogitem.page?P=54200		
3298	0	Black	2	Slope Brick 33 3 x 2	https://www.bricklink.com/v2/catalog/catalogitem.page?P=3298		
88930	0	Black	1	Slope Brick Curved 2 x 4 with Underside Studs	https://www.bricklink.com/v2/catalog/catalogitem.page?P=88930		
50950	0	Black	14	Slope Brick Curved 3 x 1	https://www.bricklink.com/v2/catalog/catalogitem.page?P=50950		
32062	0	Black	2	Technic Axle 2 Notched	https://www.bricklink.com/v2/catalog/catalogitem.page?P=32062		
32062	4	Red	2	Technic Axle 2 Notched	https://www.bricklink.com/v2/catalog/catalogitem.page?P=32062		
4519	71	Light Bluish Gray	1	Technic Axle 3	https://www.bricklink.com/v2/catalog/catalogitem.page?P=4519		
3705	0	Black	2	Technic Axle 4	https://www.bricklink.com/v2/catalog/catalogitem.page?P=3705		
3706	0	Black	2	Technic Axle 6	https://www.bricklink.com/v2/catalog/catalogitem.page?P=3706		
44294	71	Light Bluish Gray	1	Technic Axle 7	https://www.bricklink.com/v2/catalog/catalogitem.page?P=44294		
3749	0	Black	4	Technic Axle Pin	https://www.bricklink.com/v2/catalog/catalogitem.page?P=3749		
32523	71	Light Bluish Gray	1	Technic Beam 3	https://www.bricklink.com/v2/catalog/catalogitem.page?P=32523		
6632	0	Black	6	Technic Beam 3 x 0.5 Liftarm	https://www.bricklink.com/v2/catalog/catalogitem.page?P=6632		
32056	0	Black	4	Technic Beam 3 x 3 x 0.5 Liftarm Bent 90	https://www.bricklink.com/v2/catalog/catalogitem.page?P=32056		
32017	4	Red	1	Technic Beam 5 x 0.5	https://www.bricklink.com/v2/catalog/catalogitem.page?P=32017		
32065	4	Red	1	Technic Beam 7 x 0.5	https://www.bricklink.com/v2/catalog/catalogitem.page?P=32065		
40490	71	Light Bluish Gray	2	Technic Beam 9	https://www.bricklink.com/v2/catalog/catalogitem.page?P=40490		
6541	0	Black	2	Technic Brick 1 x 1 with Hole	https://www.bricklink.com/v2/catalog/catalogitem.page?P=6541		
6541	4	Red	2	Technic Brick 1 x 1 with Hole	https://www.bricklink.com/v2/catalog/catalogitem.page?P=6541		
3895	4	Red	2	Technic Brick 1 x 12 with Holes	https://www.bricklink.com/v2/catalog/catalogitem.page?P=3895		
32064b	0	Black	2	Technic Brick 1 x 2 with Axlehole	https://www.bricklink.com/v2/catalog/catalogitem.page?P=32064		
32064b	4	Red	1	Technic Brick 1 x 2 with Axlehole	https://www.bricklink.com/v2/catalog/catalogitem.page?P=32064		
3700	4	Red	3	Technic Brick 1 x 2 with Hole	https://www.bricklink.com/v2/catalog/catalogitem.page?P=3700		
32000	4	Red	2	Technic Brick 1 x 2 with Holes	https://www.bricklink.com/v2/catalog/catalogitem.page?P=32000		
32123a	14	Yellow	9	Technic Bush 1/2 Smooth with Axle Hole Reduced	https://www.bricklink.com/v2/catalog/catalogitem.page?P=4265c		
6589	19	Tan	2	Technic Gear 12 Tooth Bevel	https://www.bricklink.com/v2/catalog/catalogitem.page?P=6589		
32270	0	Black	1	Technic Gear 12 Tooth Double Bevel	https://www.bricklink.com/v2/catalog/catalogitem.page?P=32270		
32269	19	Tan	1	Technic Gear 20 Tooth Double Bevel	https://www.bricklink.com/v2/catalog/catalogitem.page?P=32269		
6221	0	Black	4	Technic Hub / Handle 1 x 1	https://www.bricklink.com/v2/catalog/catalogitem.page?P=424		
3673	71	Light Bluish Gray	4	Technic Pin	https://www.bricklink.com/v2/catalog/catalogitem.page?P=3673		
4274	1	Blue	2	Technic Pin 1/2	https://www.bricklink.com/v2/catalog/catalogitem.page?P=4274		
4274	71	Light Bluish Gray	2	Technic Pin 1/2	https://www.bricklink.com/v2/catalog/catalogitem.page?P=4274		
32556	71	Light Bluish Gray	2	Technic Pin Long	https://www.bricklink.com/v2/catalog/catalogitem.page?P=32556		
2719	7	Light Bluish Gray	2	Technic Plate 1 x 10 with Holes	https://www.bricklink.com/v2/catalog/catalogitem.page?P=2719		

BR 80 – Teileliste – www.holgermatthes.de/bricks

Anzahl der Modelle: **1**

Teilenumme	Farbnummer (ML	Farbname (Bricklink)	Anzahl	Beschreibung	Teil bei Bricklink	Relevant für Farbgebu	Anmerkung
4263	0	Black	2	Technic Plate 1 x 4 with Holes	https://www.bricklink.com/v2/catalog/catalogitem.page?P=4263		
32126	71	Light Bluish Gray	2	Technic, Axle and Pin Connector Toggle Joint Smooth	https://www.bricklink.com/v2/catalog/catalogitem.page?P=44		
2555	0	Black	1	Tile 1 x 1 with Clip	https://www.bricklink.com/v2/catalog/catalogitem.page?P=2555		
3070b	0	Black	8	Tile 1 x 1 with Groove	https://www.bricklink.com/v2/catalog/catalogitem.page?P=3070b		
2412b	0	Black	2	Tile 1 x 2 Grille with Groove	https://www.bricklink.com/v2/catalog/catalogitem.page?P=2412b		
3069b	0	Black	13	Tile 1 x 2 with Groove	https://www.bricklink.com/v2/catalog/catalogitem.page?P=3069b		
2431	0	Black	2	Tile 1 x 4 with Groove	https://www.bricklink.com/v2/catalog/catalogitem.page?P=2431		
6636	0	Black	2	Tile 1 x 6	https://www.bricklink.com/v2/catalog/catalogitem.page?P=6636		
6636	4	Red	2	Tile 1 x 6	https://www.bricklink.com/v2/catalog/catalogitem.page?P=6636		
3068b	0	Black	9	Tile 2 x 2 with Groove	https://www.bricklink.com/v2/catalog/catalogitem.page?P=3068b		
87079	0	Black	2	Tile 2 x 4 with Groove	https://www.bricklink.com/v2/catalog/catalogitem.page?P=87079		
2460	4	Red	1	Tile, Modified 2 x 2 with Pin	https://www.bricklink.com/v2/catalog/catalogitem.page?P=2460		
50945	0	Black	4	Tire 14mm D. x 6mm Solid Smooth	https://www.bricklink.com/v2/catalog/catalogitem.page?P=50945		
2920	0	Black	1	Train Coupling Type 2	https://www.bricklink.com/v2/catalog/catalogitem.page?P=2920		
bd240	4	Red	2	Train Wheel BBB Medium Blind Driver 24.0mm	http://bigbenbricks.com/products/products.html		Big Ben Bricks
fd240	4	Red	4	Train Wheel BBB Medium Flanged Driver 24.0mm	http://bigbenbricks.com/products/products.html		Big Ben Bricks
60592	0	Black	2	Window 1 x 2 x 2 Flat Front	https://www.bricklink.com/v2/catalog/catalogitem.page?P=60592		
2377	0	Black	2	Window 1 x 2 x 2 Plane	https://www.bricklink.com/v2/catalog/catalogitem.page?P=2377		
			504				